MANDÍK

TPM 148/21
Version 2026-09-29

FDMR 180

Fire damper

Technical Documentation
Installation, Commissioning, Operation, Maintenance and Service Manual

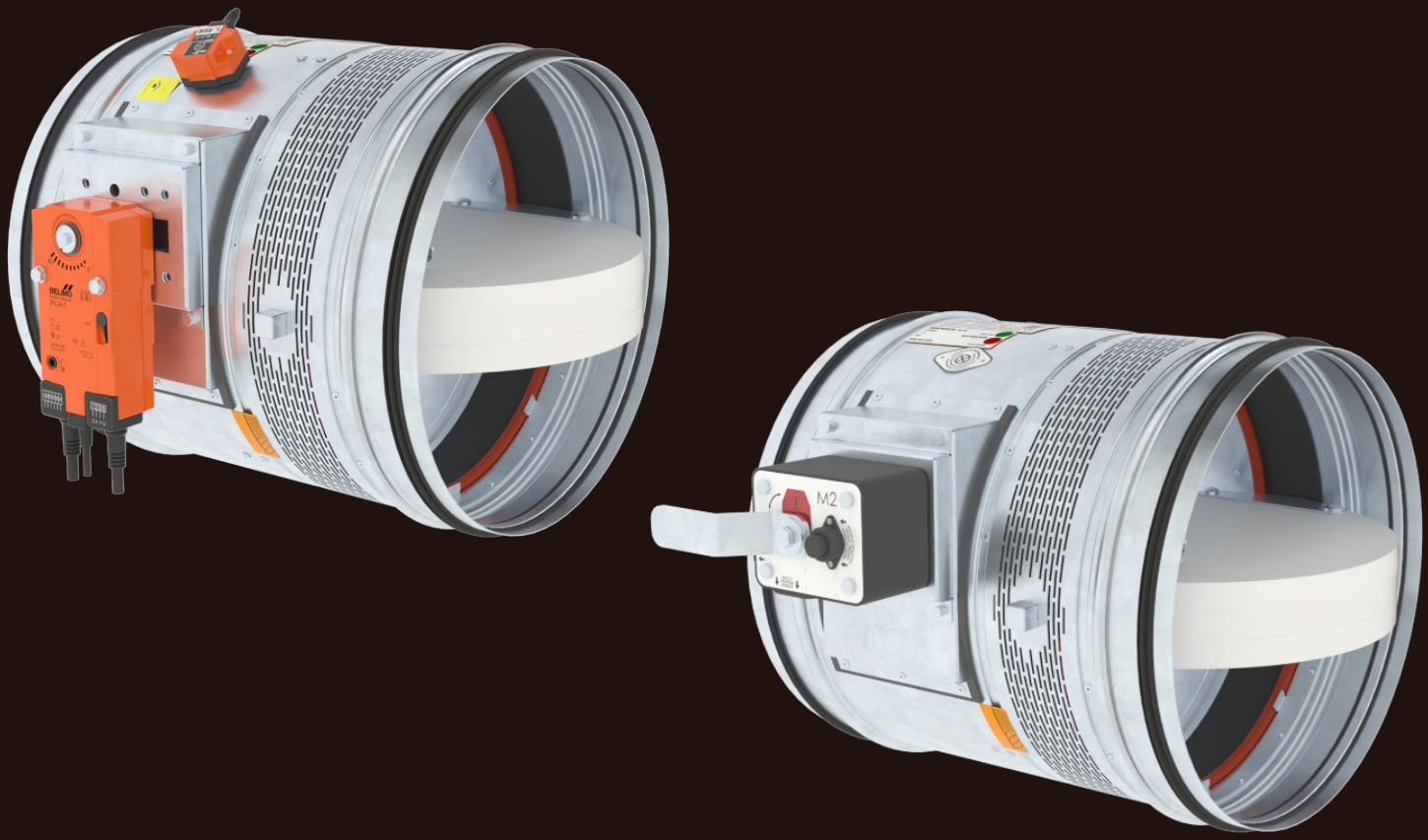

CE
1391

MANDÍK®
www.mandik.com

MANDÍK, a. s. • Dobříšská 550 • 267 24 Hostomice • Czech Republic • Tel.: +420 311 706 742 • E-Mail: mandik@mandik.cz

These technical specifications state a row of manufactured sizes and models of fire dampers FDMR 180.
It is valid for production, designing, ordering, delivery, maintenance and operation.

CONTENT

I. GENERAL....3
Description....3
II. DESIGN....4
Design with manual control....4
Design with spring return actuator....6
Design with the communication and supply device....12
III. DIMENSIONS....14
Technical parameters....19
IV. INSTALLATION....20
Placement and installation....20
Statement of installations....21
In solid wall construction....22
In solid ceiling construction....23
V. SUSPENSION SYSTEMS....24
Example of duct connection....26
VI. TECHNICAL DATA....27
Pressure loss....27
Noise data....28
VII. MATERIAL, FINISHING....29
VIII. TRANSPORTATION, STORAGE AND WARRANTY....30
Logistic terms....30
Warranty....30
IX. ASSEMBLY, ATTENDANCE AND MAINTENANCE....31
Commissioning and revisions....33
X. ORDERING INFORMATIONS....35
Ordering key....35
Accessories....36
Data label....36

I. GENERAL

Description

Fire dampers are shutters in ducts of air-conditioning devices that prevent the spread of fire and combustion products from one fire segment to the other one by means of closing the duct in the points of fire separating constructions.

Damper blade automatically closes air duct using a closing spring or a spring return actuator. The closing spring is actuated by pressing a button on the manual control or by melting a fusible link.

The return spring of the actuator is actuated when a thermoelectric activation device BAT is activated, when a test button on BAT is pressed or when power supply of the actuator is interrupted.

After closing the blade, the damper is sealed with silicon against smoke penetration. On request by customer, the damper can be supplied silicon-free. In the closed position, the damper is also sealed with material which increases its volume due to increasing temperature and air proofs the air duct.

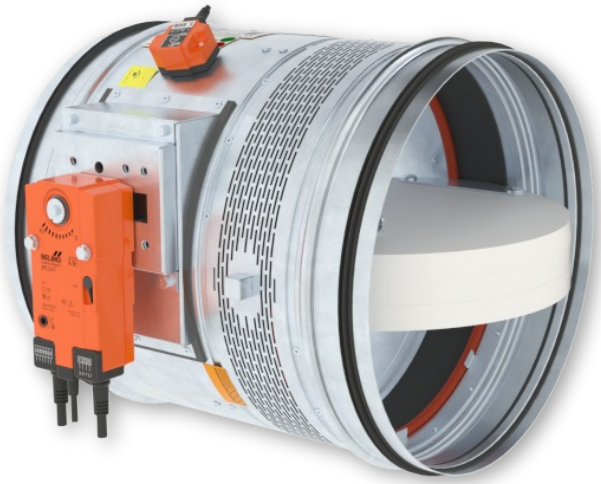

FDMR 180 with spring return actuator



FDMR 180 with manual control

Damper characteristics

- CE certified acc. to EN 15650
- Tested in accordance with EN 1366-2
- Classified acc. to EN 13501-3+A1
- External Casing leakage class min. ATC 3 (staré značení “C“) acc. to EN 1751
- Internal leakage min. class 3 acc. to EN 1751
- Cycling test in class C_{10000} acc. to EN 15650
- Corrosion resistant acc. to EN 15650
- Certificate of constancy of performance No. 1391-CPR-XXXX/XXXX
- Declaration of Perfomance No. PM/FDMR180/01/XX/X
- Hygienic assessment of fire dampers - Report No. 1.6/pos/19/19b

Working conditions

- Exact damper function is provided under the following conditions:
  - maximum air velocity 12 m/s
  - maximum pressure difference 1200 Pa
  - the air circulation in the whole damper section must be secured steady over the entire surface.
- Dampers can be installed in arbitrary position
- Dampers are suitable for systems without abrasive, chemical and adhesive particles.
- Dampers are designed for macroclimatic areas with mild climate according to EN IEC 60 721-3-3 ed.2., class 3K22. (Environment 3K22 is typically protected place with regulated temperature)
- Temperature in the place of installation is permitted to range from -30°C to +50°C.

II. DESIGN

Design with manual control

Design .01

- Design with manual control with a fusible link which actuates the shutting device, after the nominal activation temperature 72°C has been reached.
- Automatic initiation of the manual control is not activated if the temperature does not exceed 70°C.
- In case that other activation temperatures are required, fusible links with nominal activation temperature +104°C or +147°C can be supplied (this requirement must be specified in the order).

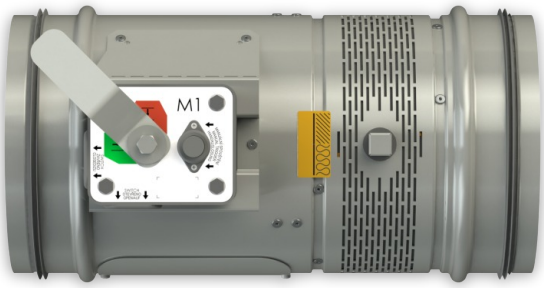

Design .01

ATTENTION:

- Manual controls are produced in four sizes M2 to M5, difference is only in size of a closing spring, which closes the fire damper.
- For the size of fire dampers is always assigned the size of the manual control → see page 19
- It is not recommended to use different size of the manual control than given by the manufacturer, otherwise there is a risk of damaging the fire damper.

Design .11

- Design .01 with manual control can be complemented with a limit switch signaling of the damper blade position "CLOSED".
- Cable is connected directly to limit switch.
- Limit switch detail → see page 5

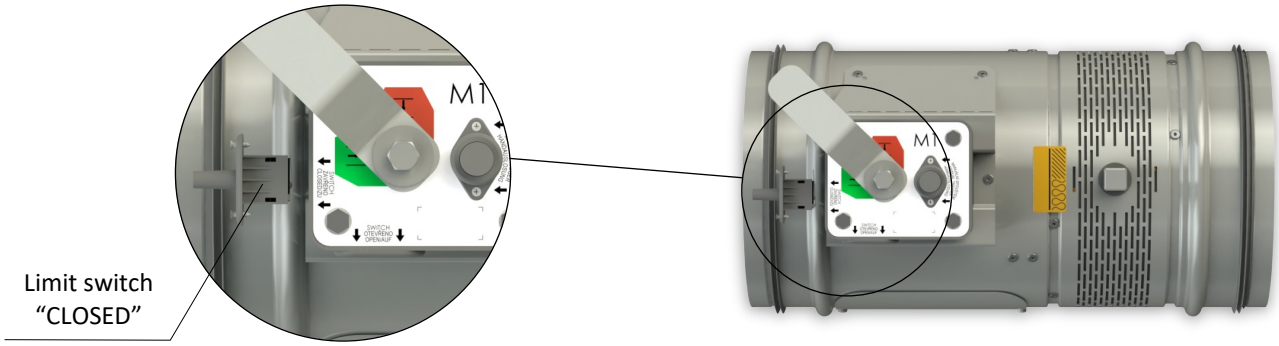

Design .11

Design .80

- Design .01 with manual control can be complemented with two limit switches signaling of the damper blade position "CLOSED" and "OPEN".
- Cables are connected directly to limit switches.
- Limit switch detail → see page 5

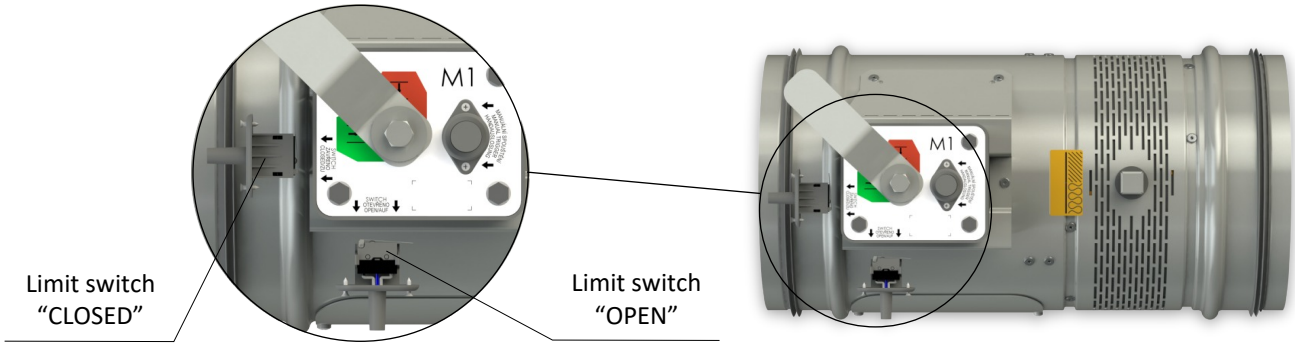

Design .80

Manual control

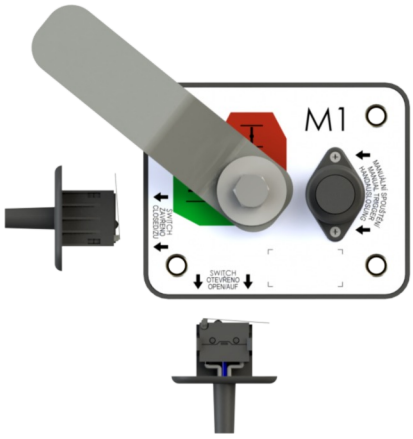

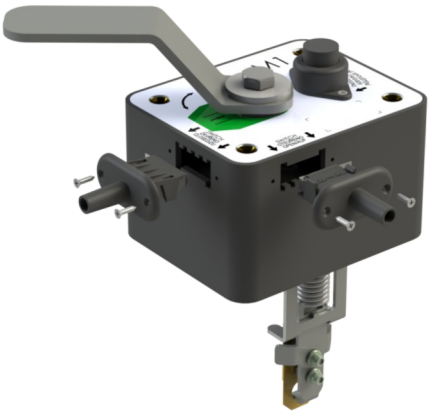



Fusible link replacement:*

1. The mechanism (damper) must be in the closed position (indicated by the red area on the sticker).
2. Press the Close button.
3. Using adjustable pliers, squeeze the fusible link clips together.
4. Pull the fusible link out of the clips.
5. Using adjustable pliers, squeeze the fusible link clips together again.
6. Insert the new fusible link into the clips.

Function check:**

7. Open the mechanism (damper) by moving the lever to the Open position (indicated by the green area on the sticker).
8. Press the Close button and check that the mechanism closes correctly. Repeat steps 7 and 8 at least 3 times.

* The mechanism can be removed for change of the fusible link.
** Caution: Risk of injury from moving parts.

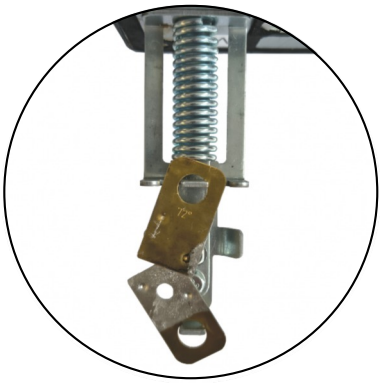

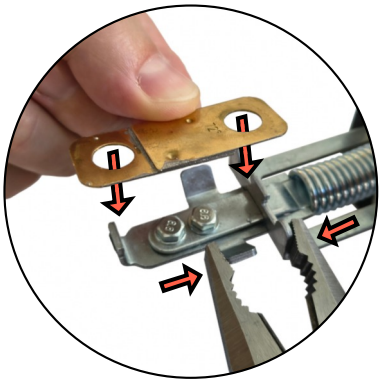



Limit switch G905-300E03W1

<u>This limit switch is possible to connect in two following ways</u>

- CUT-OFF if the arm is moving … connect wire 1+2
- SWITCH-ON if the arm is moving … connect wire 1+4

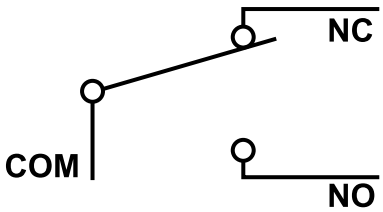

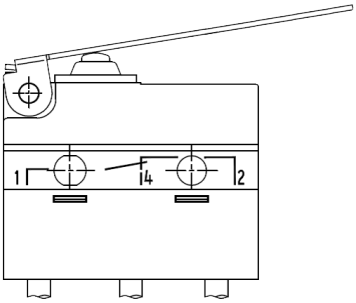



Nominal voltage and maximal current	AC 230V / 5A
Class of protection	IP 67
Working temperature	-25°C … +120°C

1(COM) - black wire
2(NC) - gray wire
4(NO) - blue wire

Design with spring return actuator

Design .40 and .50

- The fire dampers are equipped with Belimo spring return actuators with thermoelectric activation device BAT. The spring return actuator types are BFL, BFN or BF depending on the damper size. (Further mentioned as „actuator“).
- After being connected to power supply 230V or AC/DC 24V, the actuator rotates the damper blade to the operating position "OPEN" and at the same time pre-stretches its return spring.
- When the actuator is power supplied, the damper blade is in the position "OPEN" and the return spring is pre-stretched.
- Time needed for full opening of the damper blade from the position "CLOSED" to the position "OPEN" is maximum 120 sec. If the actuator power supply is interrupted (due to loss of supply voltage, or pressing a test button on the thermoelectric activation device BAT), the actuator rotates the damper blade to the breakdown position "CLOSED".
- The time of closing the damper blade from the position "OPEN" to the position "CLOSED" takes maximum 20 sec.
- In case that the power supply is restored again (the blade can be in any position), the actuator starts to rotate the damper blade back to the position "OPEN".
- A thermoelectric activation device BAT, which contains two fusible links Tf1 and Tf2, is an integral part of the actuator.
- These fuses are activated when temperature +72°C has been reached (the fuse Tf1 due to temperature outside the duct and the fuse Tf2 due to temperature inside the duct). The thermoelectric activation device can also be equipped with a Tf2 fusible link type ZBAT 95/120/140 (must be specified in the order). In this case, the activation temperature inside the duct is +95°C, +120°C or +140°C (depending on the type).
- After the fusible link Tf1 or Tf2 has been activated, the power supply is permanently and irreversibly interrupted and the actuator, by means of the pre-stretched spring, rotates the damper blade into the breakdown position "CLOSED".
- Signalisation of damper blade position "OPEN" and "CLOSE" is provided by two microswitches.

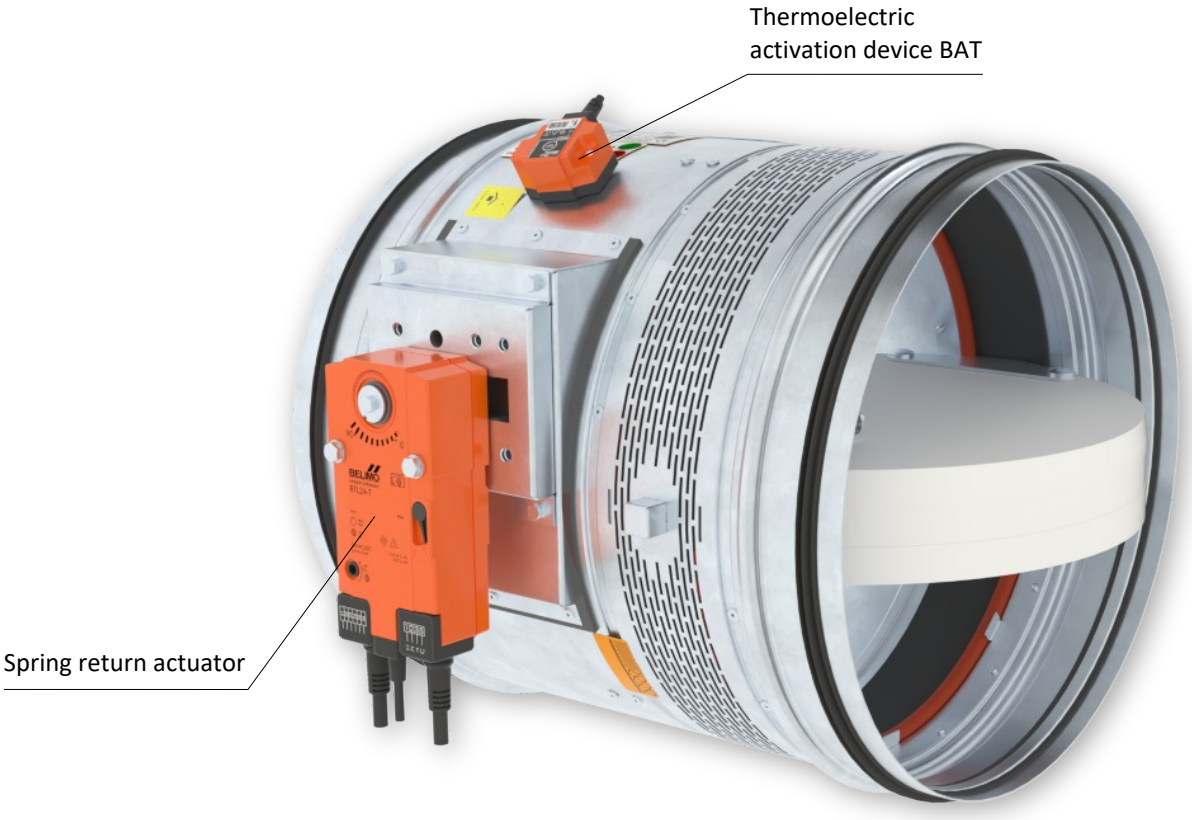

Design .40 and .50

Actuator BELIMO BFL 230-T

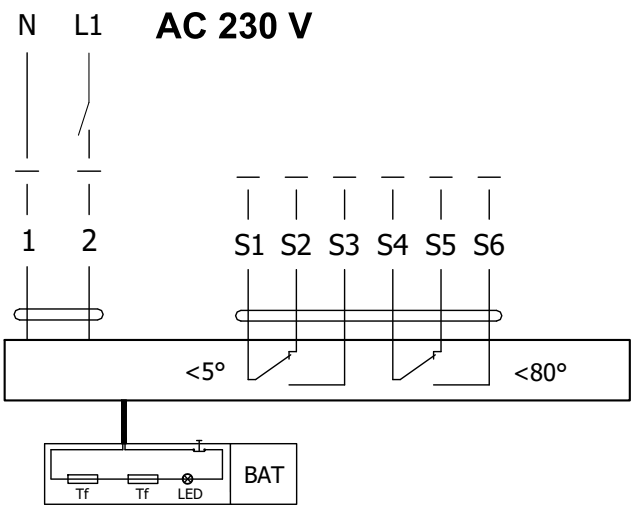

Actuator BELIMO BFL 24-T(-ST)

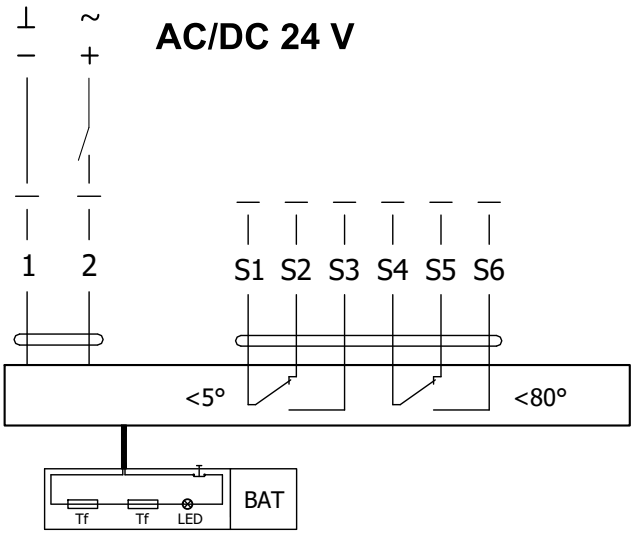



Actuator BELIMO BFL 230-T(-ST), BFL 24-T(-ST)		
Actuator BELIMO - 4 Nm/ 3 Nm Spring	**BFL 230-T(-ST)**	**BFL 24-T(-ST)**
Power voltage	AC 230 V 50/60Hz	AC/DC 24 V 50/60Hz
Power consumption - in operation - in rest position	2,6 W 0,7 W	2,0 W 0,7 W
Dimensioning	4 VA (Imax 4 A @ 5 ms)	2,8 VA (Imax 2,9 A @ 5 ms)
Protection class	II	III
Degree of protection	IP 54	
Running time - motor - spring return	< 60 s ~ 20 s	
Ambient temperature - normal duty - safety duty - non-operating temperature	 -30°C … +55°C The safe position will be attained up to max. +75°C -40°C … +55°C	
Connection - supply/control - auxiliary switch	cable 1 m, 2 x 0,75 mm² (BFL 2xx-T-ST) with 3-pin plug-in connectors cable 1 m, 6 x 0,75 mm² (BFL 2xx-T-ST) with 6-pin plug-in connectors	
Response temperature fusible link	duct outside temperature +72°C duct inside temperature +72°C	

Actuator BELIMO BFN 230-T

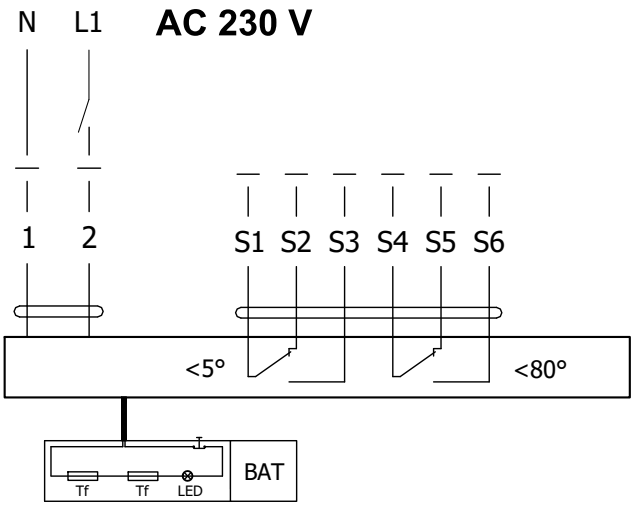

Actuator BELIMO BFN 24-T(-ST)

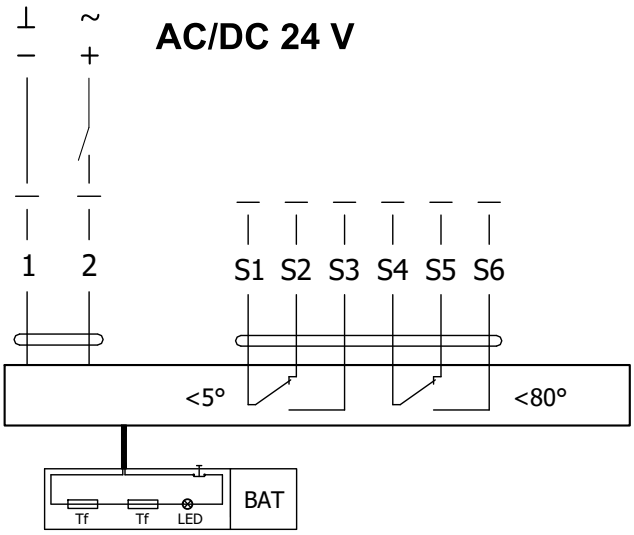



Actuator BELIMO BFN 230-T(-ST), BFN 24-T(-ST)		
Actuator BELIMO - 9 Nm/ 7 Nm Spring	**BFN 230-T(-ST)**	**BFN 24-T(-ST)**
Power voltage	AC 230 V 50/60Hz	AC/DC 24 V 50/60Hz
Power consumption - in operation - in rest position	3,5 W 1,3 W	3,2 W 1,2 W
Dimensioning	6,5 VA (Imax 4 A @ 5 ms)	4,3 VA (Imax 2,9 A @ 5 ms)
Protection class	II	III
Degree of protection	IP 54	
Running time - motor - spring return	< 60 s ~ 20 s	
Ambient temperature - normal duty - safety duty - non-operating temperature	 -30°C … +55°C The safe position will be attained up to max. +75°C -40°C … +55°C	
Connection - supply/control - auxiliary switch	cable 1 m, 2 x 0,75 mm² (BFN 2xx-T-ST) with 3-pin plug-in connectors cable 1 m, 6 x 0,75 mm² (BFN 2xx-T-ST) with 6-pin plug-in connectors	
Response temperature fusible link	duct outside temperature +72°C duct inside temperature +72°C	

Actuator BELIMO BF 230-TN

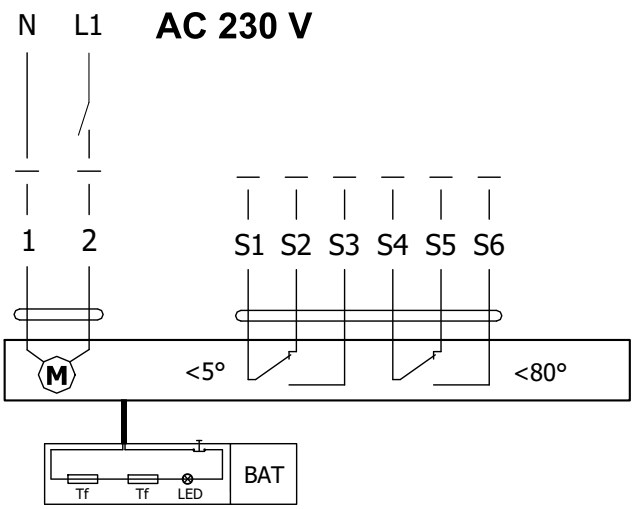

Actuator BELIMO BF 24-TN (-ST)

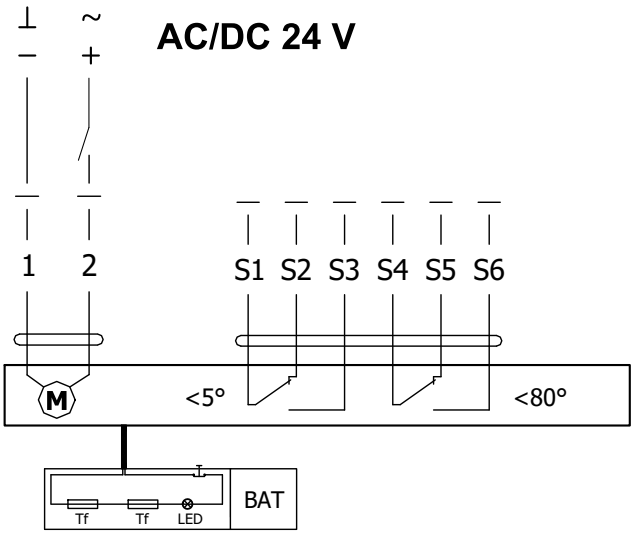



Actuator BELIMO BF 230-TN(-ST), BF 24-TN(-ST)		
Actuator BELIMO - 18 Nm/ 12 Nm Spring	**BF 230-TN(-ST)**	**BF 24-TN(-ST)**
Power voltage	AC 230 V 50/60Hz	AC/DC 24 V 50/60Hz
Power consumption - in operation - in rest position	8,5 W 3 W	7 W 2 W
Dimensioning	11 VA (Imax 8,3 A @ 5 ms)	10 VA (Imax 8,3 A @ 5 ms)
Protection class	II	III
Degree of protection	IP 54	
Running time - motor - spring return	120 s ~ 16 s	
Ambient temperature - normal duty - safety duty - non-operating temperature	 -30°C … +50°C The safe position will be attained up to max. +75°C -40°C … +50°C	
Connection - supply/control - auxiliary switch	cable 1 m, 2 x 0,75 mm² (BF 2xx-TN-ST) with 3-pin plug-in connectors cable 1 m, 6 x 0,75 mm² (BF 2xx-TN-ST) with 6-pin plug-in connectors	
Response temperature fusible link	duct outside temperature +72°C duct inside temperature +72°C	

Thermoelectric activation device BAT

- If the fusible link Tf1 is interrupted (due to temperature outside the duct), it is necessary to replace the spring return actuator. Thermoelectric activation device BAT is integral part of the actuator.
- If the fusible link Tf2 is interrupted (due to temperature inside the duct), only the spare part ZBAT 72 (95/120/140) needs to be replaced (acc.to the activation temperature).
- When one of the fusible links responds, the supply voltage is interrupted permanently and irreversibly.
- The function (interruption of the supply voltage) can be checked by pressing the test button.
- Installation is carried out with the pre-assembled, self-tapping screws.



BELIMO ZBAT 72
Black (BK) = 72°C (standard)

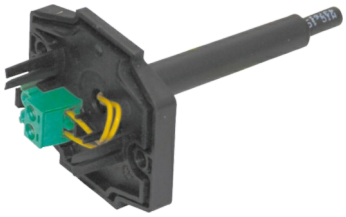

BELIMO ZBAT 95
Grey (GY) = 95°C

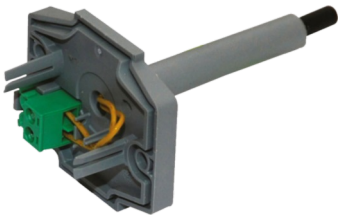

BELIMO ZBAT 120
Orange (OG) = 120°C

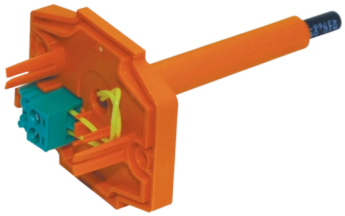

BELIMO ZBAT 140
Red (RD) = 140°C

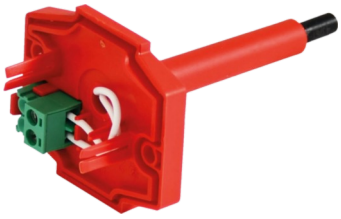

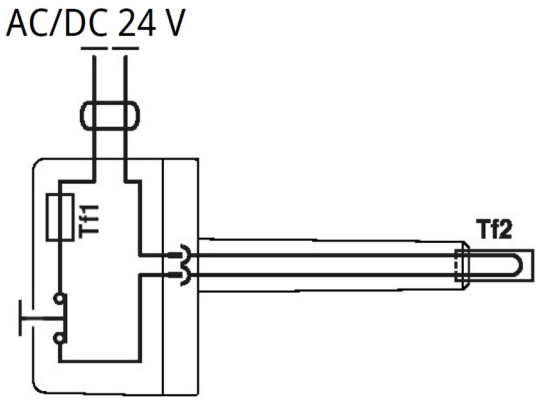

Thermoelectric activation device BAT 72 (95/120/140)	
Power voltage	AC/DC 24 V 50/60Hz
Rated current	1 A
AC/DC throughput resistance	<1 Ω
Protection class	III
Degree of protection	IP 54
Probe length	65 mm
Ambient temperature Storage temperature Ambient humidity	-30°C … +50°C -40°C … +50°C Max. 95% RH, non-condensing
Connection supply	Cable 1 m, 2 x 0.5 mm², Betaflam cable heatresistant up to 145°C
Response temperature fusible link	Duct inside temperature +72 (95/120/140)°C Duct outside temperature +72 (95/120/140)°C

Design .41 and .51

- Design .41 or .51 with actuator and smoke detector ORS 142 K. The voltage can be AC 230 V or 24 V DC. Design .41 with voltage AC 230 V is equipped with communication and supply device BKN 230-24-MOD and with actuator BF 24-TN (BFL 24-T, BFN 24-T).
- The smoke detector is activated when smoke spreads in air duct system. Deactivation of the smoke detector alarm status is provided by interruption of supply voltage for min. 2s.
- Signalisation of damper blade position "OPEN" and "CLOSE" is provided by two microswitches.
- The smoke detector is not part of the damper in diameter DN 200 mm. The smoke detector is supplied separately.

Design .41 with actuator BF 24-TN (BFL, BFN 24-T), with smoke detector ORS 142 K and with supply device BKN 230-24-MOD (voltage AC 230 V)

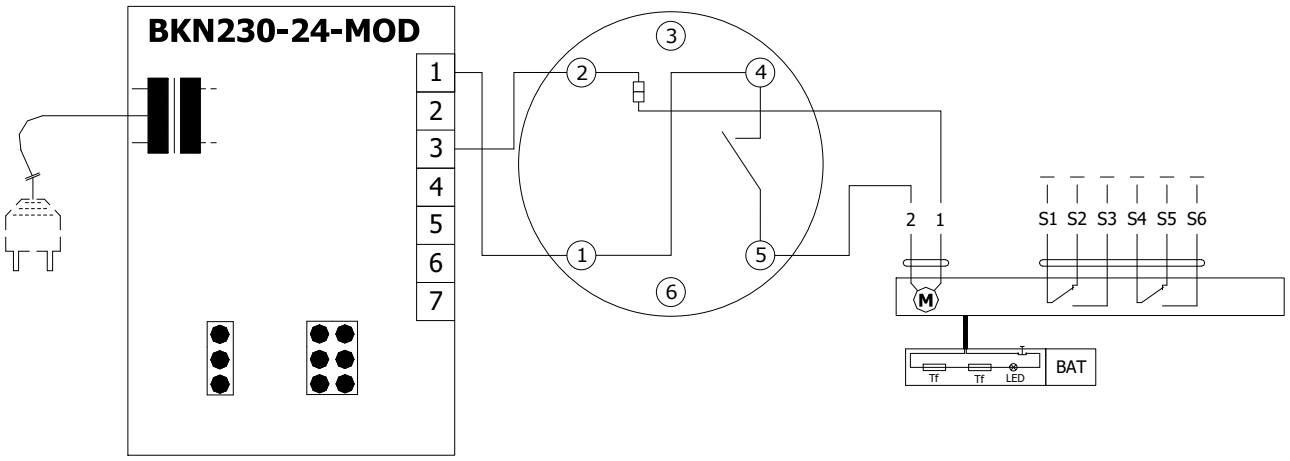

Design .51 with actuator BF 24-TN (BFL, BFN 24-T), with smoke detector ORS 142 K (voltage 24 V DC)

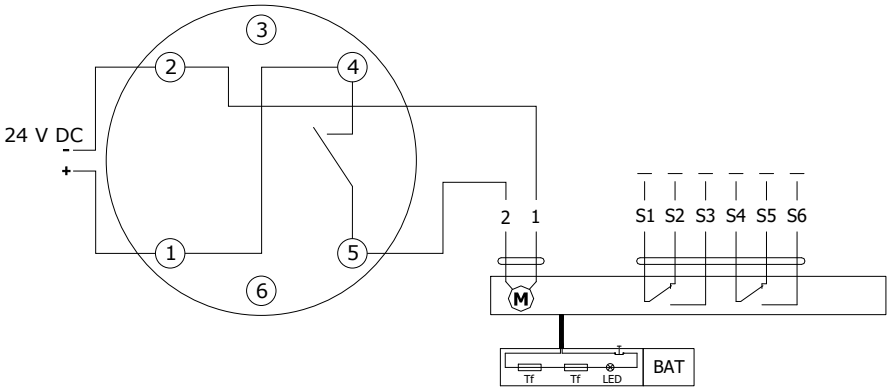

Communication and supply device BKN 230-24-MOD	
Nominal voltage	AC 230 V 50/60Hz
Power consumption	3 W (operating position)
Dimensioning	14 VA (including actuator)
Protection Class	II
Degree of protection	IP 40
Ambient temperature Non-operating temperature	-20°C ... +50°C -40°C ... +80°C
Connection - net - motor - terminal board	cable 0,9 m with EURO plug type 26 6-pole connector, 3-pole connector screw terminals for cable 2x1,5 mm²

Design with the communication and supply device

Design .63, 63S

- Design with the communication and supply device BKN 230-24-MOD and actuator BF 24-TN-ST (BFL 24-T-ST, BFN 24-T-ST) for communication with control systems using the Modbus RTU or BACnet MS / TP. Design 63. can be extended with an optical smoke detector ORS 142 K (design .63S).
- The wiring of the line is to be carried out in accordance with applicable RS485 regulations.
- Parameterization of the communication is done using DIL switches.
- BKN 230-24-MOD can be installed separately, without a connection to a master control system, in which case the connection bridge between the terminals 1 and 4 must be installed.
- If the test button on BAT is pressed or if the power supply (e.g. by a signal from ELECTRICAL FIRE SIGNALISATION) is disconnected, the damper blade position will be "FAILURE".
- For design 63S the smoke detector is activated when smoke spreads in air duct system. Deactivation of the smoke detector alarm status is provided by interruption of supply voltage for min. 2s.
- The smoke detector is not part of the damper in diameter DN 200 mm. The smoke detector is supplied separately.

Design with communication and supply device BKN 230-24-MOD, with actuator BF 24-TN-ST (BFL 24-T-ST, BFN 24-T-ST) and smoke detector ORS 142 K

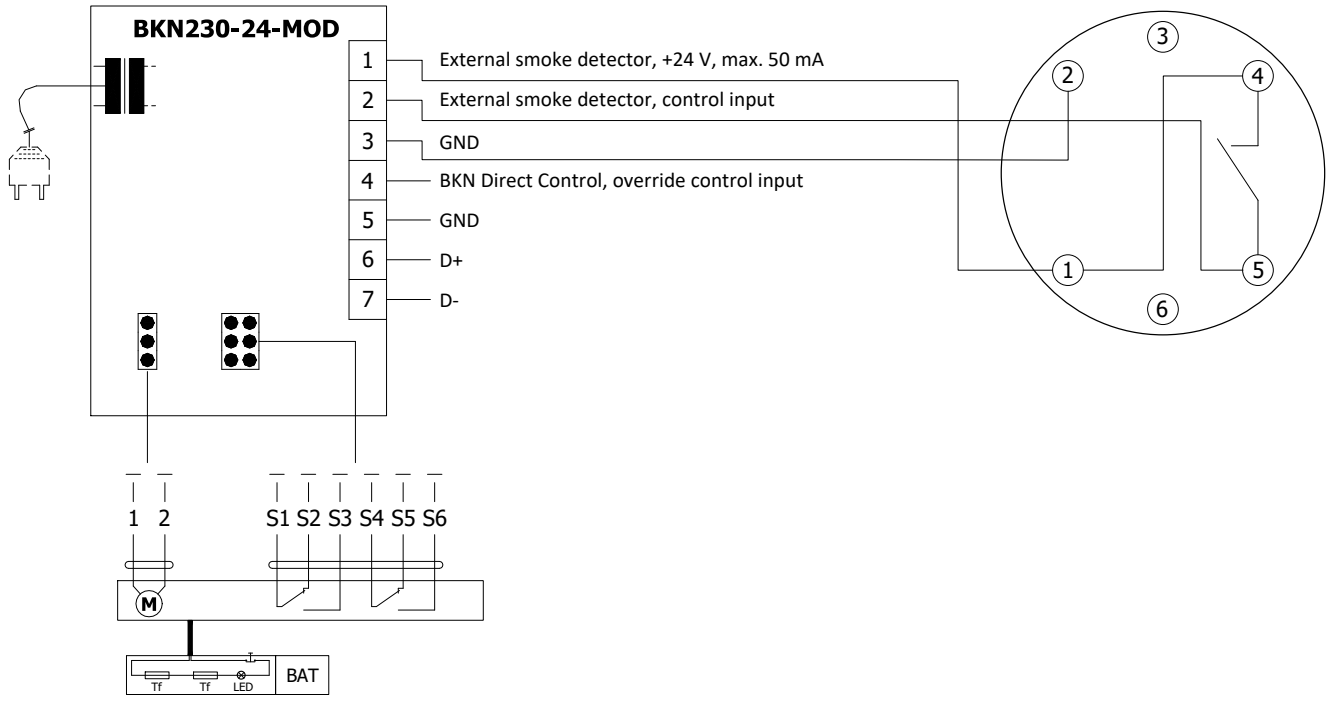

Communication and supply device BKN 230-24-MOD	
Nominal voltage	AC 230 V 50/60Hz
Power consumption	3 W (operating position)
Dimensioning	14 VA (including actuator)
Protection Class	II
Degree of protection	IP 40
Ambient temperature Non-operating temperature	-20°C ... +50°C -40°C ... +80°C
Connection - net - motor - terminal board	cable 0,9 m with EURO plug type 26 6-pole connector, 3-pole connector screw terminals for cable 2x1,5 mm²

Optical smoke detector ORS 142 K with the socket 143A

- The smoke detector ORS 142 K is used for early smoke detection in rooms or inside the ventilation system.
- The sensor operates on the light scatter principle. Inside the scanning chamber is a light source and a light sensor, in the normal state the light from the source does not fall on the senzor. Only when smoke enters the scanning chamber the light is scattered and falls on the senzor.
- The smoke detector can be connected directly to the actuator (design .41 and .51) which, in case of smoke detection, passes to the safety position, or to the BKN communication and supply device (design .63).
- By early detection of smoke, it can be effectively prevented from spreading of smoke through the ventilation system. In addition to smoke detection, the sensor can distinguish and signal slight and heavy contamination, e.g. the presence of large amounts of dust.
- The ORS 142 K smoke detector has an alarm memory, i.e. if the alarm is triggered, the safety relay opens and stays in this state even if the smoke disappears from the scanning chamber. The sensor remains in the alarm state until the power supply is briefly reset.
- On the pin 3, an external device can be connected via RS-Bus communication to report the status of the sensor.
- Pin 6 has no connection to the detector and is designed as a load-bearing structure in the base.

ORS 142 K



Socket 143A



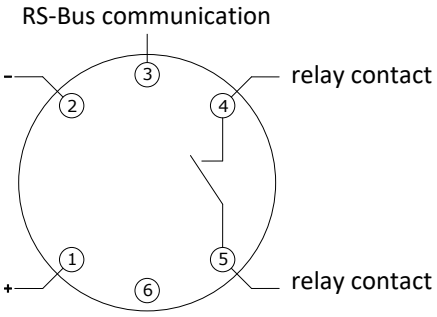

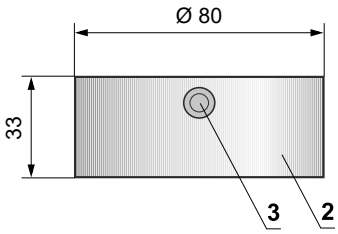

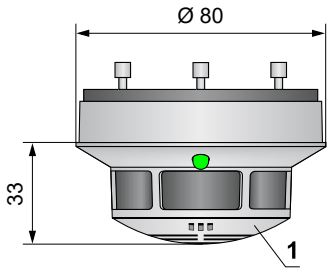

Relay contact		LED	
In operation	4 5	Green	Shines
Slight contamination		Green / Yellow	Flashes
Heavy contamination		Green / Yellow	Flashes
Fault	4 5	Yellow	Shines
Alarm		Red	Shines
Power Off		Off	–

1 ORS 142 K
2 Socket 143A
3 Side cable entries Ø 9mm
4 Rear cable entries Ø 9mm
5 Fixing hole Ø 4,5 mm
6 Fixing hole Ø 3,7 mm

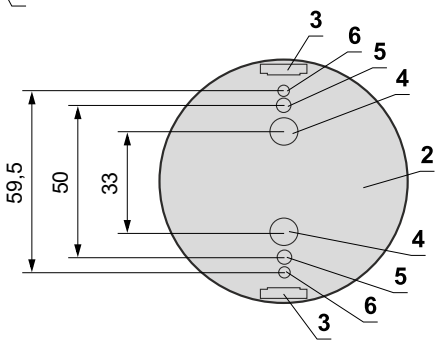

Optical smoke detector ORS 142 K with the socket 143A	
Operating voltage	18 … 28 V DC
Residual ripple	≤ 200 mV
Power Consumption Socket (without actuator)	max. 22 mA
Degree of protection	IP 42
Ambient temperature	-20°C … +75°C
Aditional temperature senzor	+70°C
Connection - net - motor - communication and supply device BKN	Cabel 1m, connected to terminals 1, 2 and 4 Actuator connected on the terminals 2 and 5 Cabel 1m, connected to terminals 1, 2, 4 and 5

III. DIMENSIONS

SPIRO design with manual control

DN 200 - DN 250

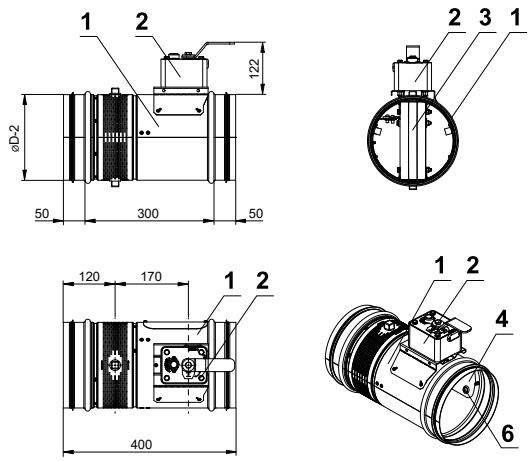

DN 280 - DN 500

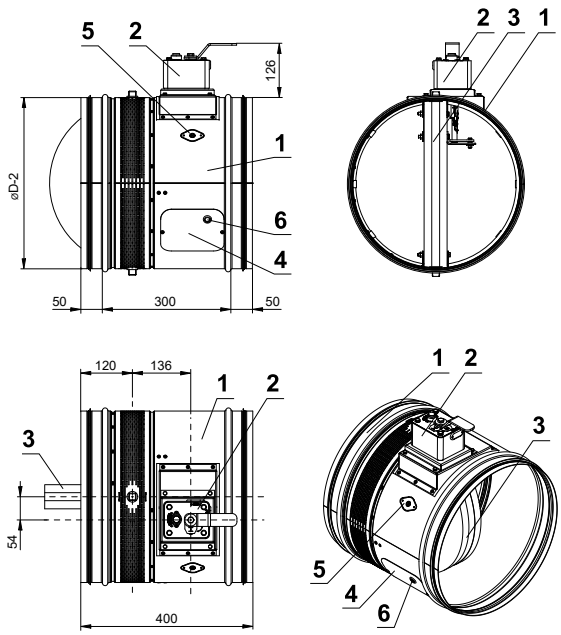

DN 560 - DN 800

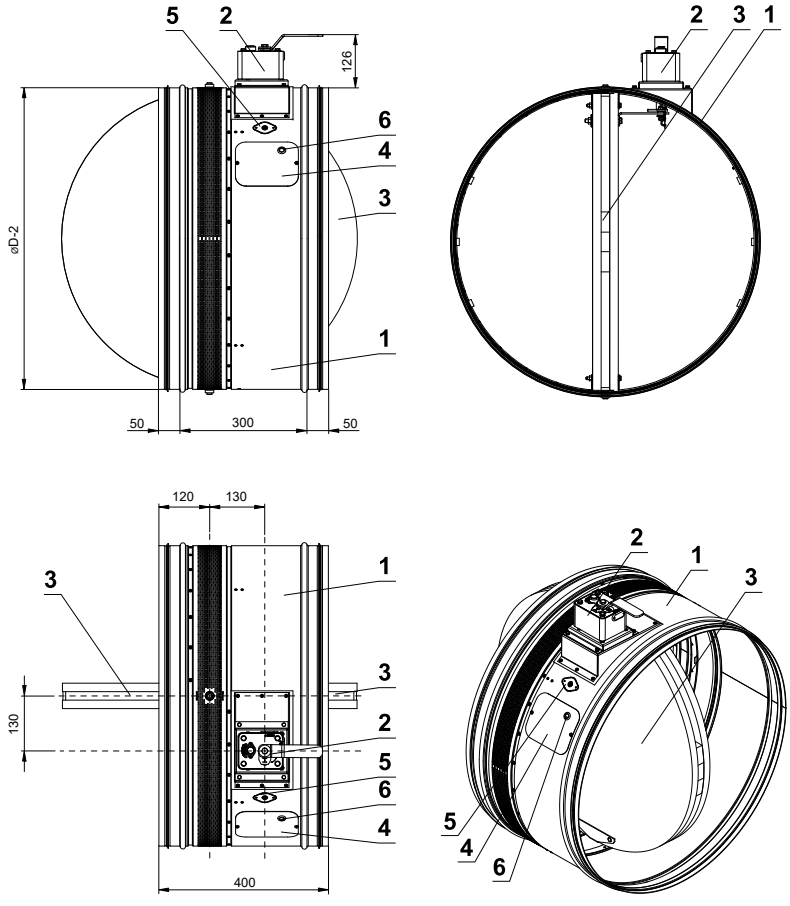

1 Damper casing
2 Manual control
3 Damper blade
4 Inspection opening cover
5 Sensor sticker
6 Hole for camera

FLANGE design with manual control

DN 200 - DN 250

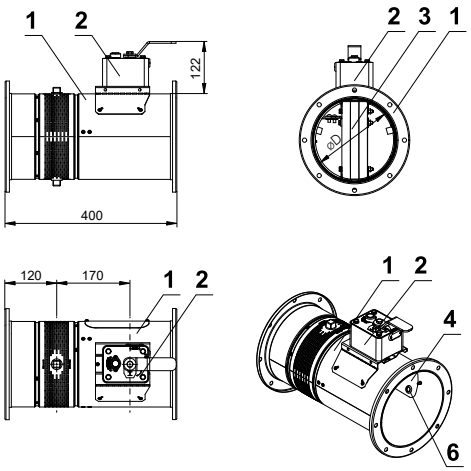

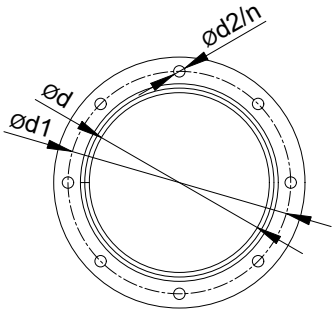

Ød [mm]	Ød1 [mm]	Ød2 [mm]	n number of holes in the flange
200	235	10	8
225	260	10	8
250	285	10	8
280	315	10	8
300	335	10	12
315	350	10	12
355	390	10	12
400	445	12	12
450	495	12	12
500	545	12	16
560	605	12	16
600	650	12	16
630	680	12	16
710	760	14	20
800	860	14	20

DN 280 - DN 500

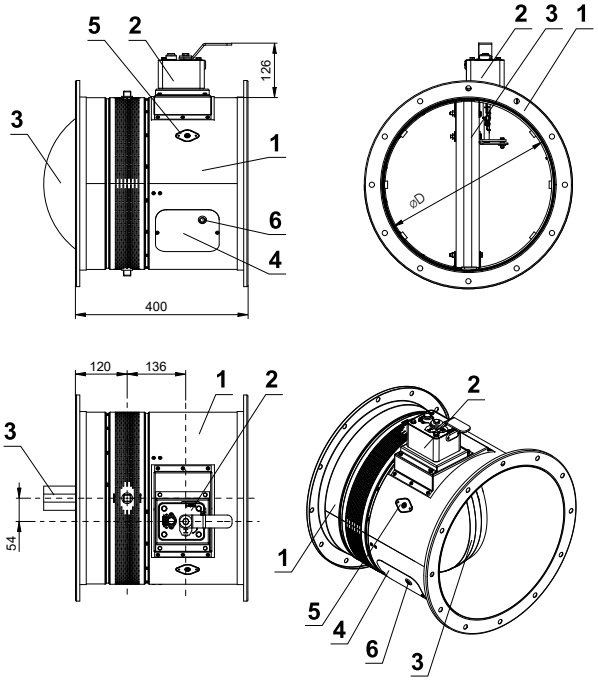

DN 560 - DN 800

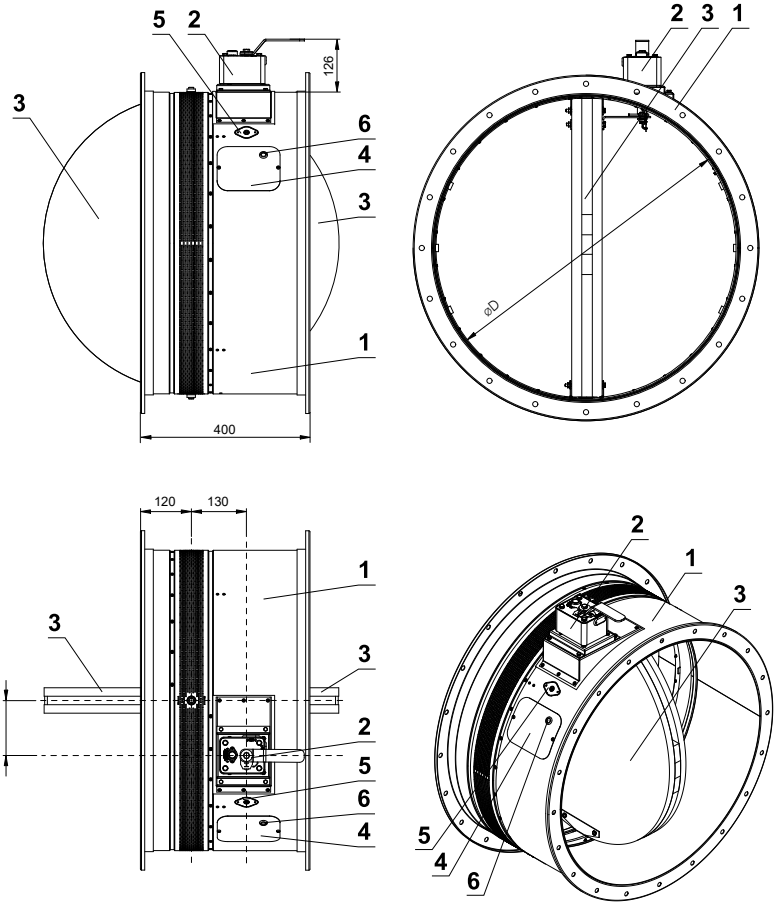

1 Damper casing
2 Manual control
3 Damper blade
4 Inspection opening cover
5 Sensor sticker
6 Hole for camera

Design SPIRO with spring return actuator

DN 200 - DN 250

The actuator cannot be rotated

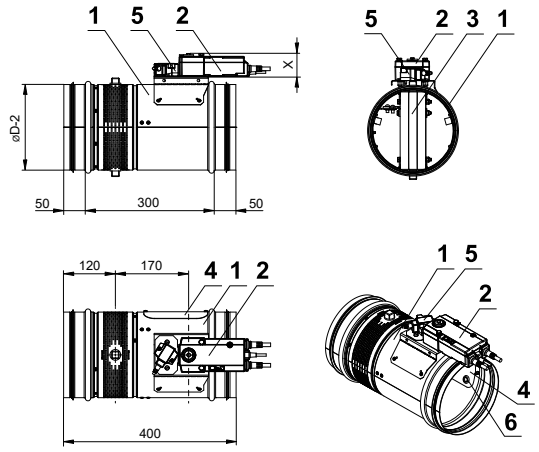

DN 280 - DN 500

The actuator can be rotated 90°

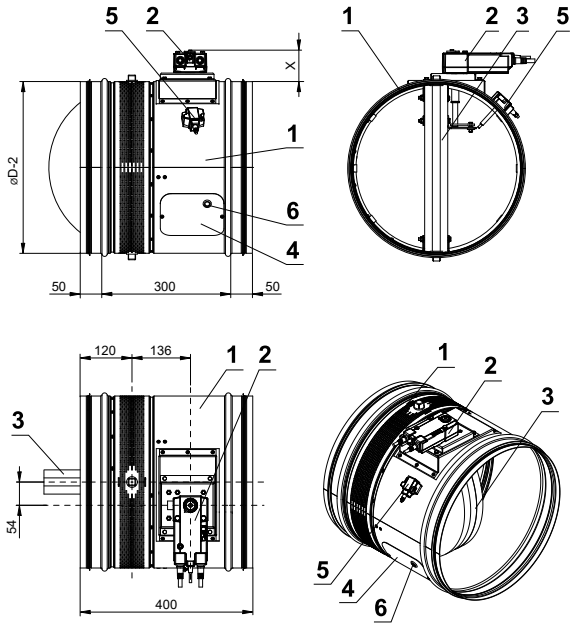

DN 560 - DN 800

The actuator can be rotated 90°

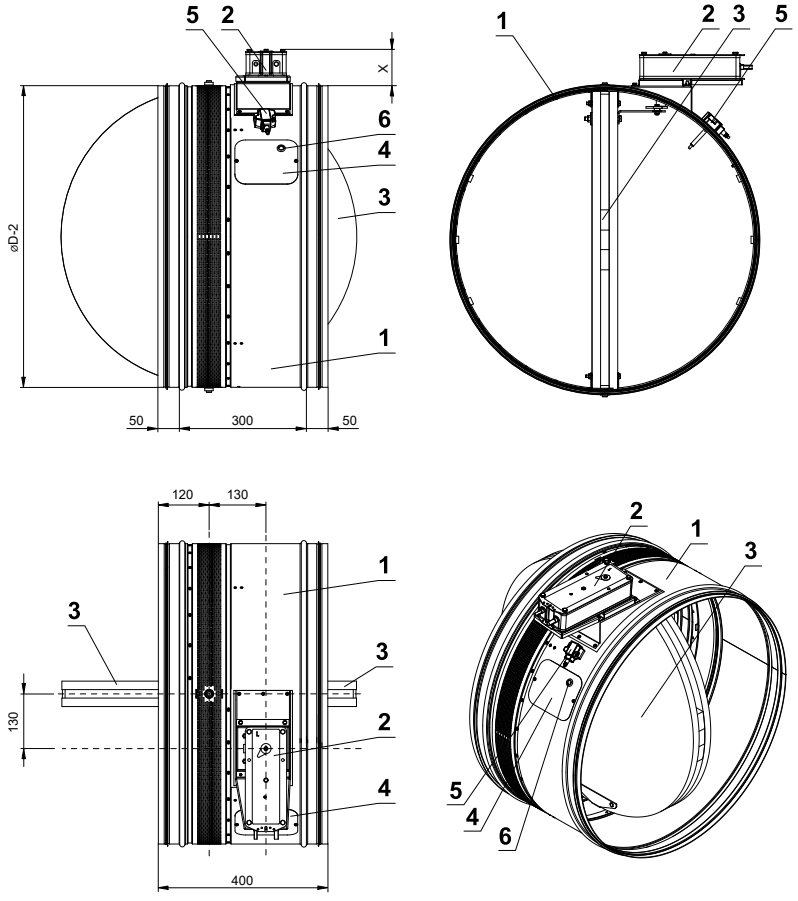

X=53 mm (BFL) *
X=72 mm (BFN) *
X=78 mm (BF) *

1 Damper casing
2 Spring return actuator
3 Damper blade
4 Inspection opening cover
5 Thermoelectric activation device BAT
6 Hole for camera

■ Assigment of actuators to individual sizes → see page 19

Design FLANGE with spring return actuator

DN 200 - DN 250

The actuator cannot be rotated

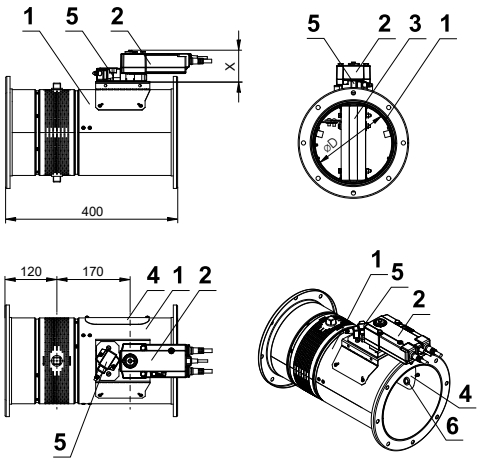

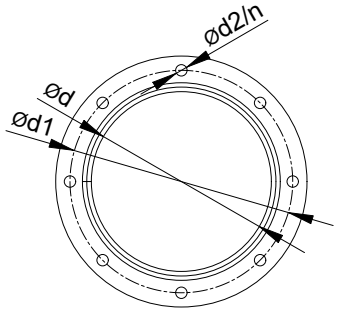

Ød [mm]	Ød1 [mm]	Ød2 [mm]	n number of holes in the flange
200	235	10	8
225	260	10	8
250	285	10	8
280	315	10	8
300	335	10	12
315	350	10	12
355	390	10	12
400	445	12	12
450	495	12	12
500	545	12	16
560	605	12	16
600	650	12	16
630	680	12	16
710	760	14	20
800	860	14	20

DN 280 - DN 500

The actuator cannot be rotated

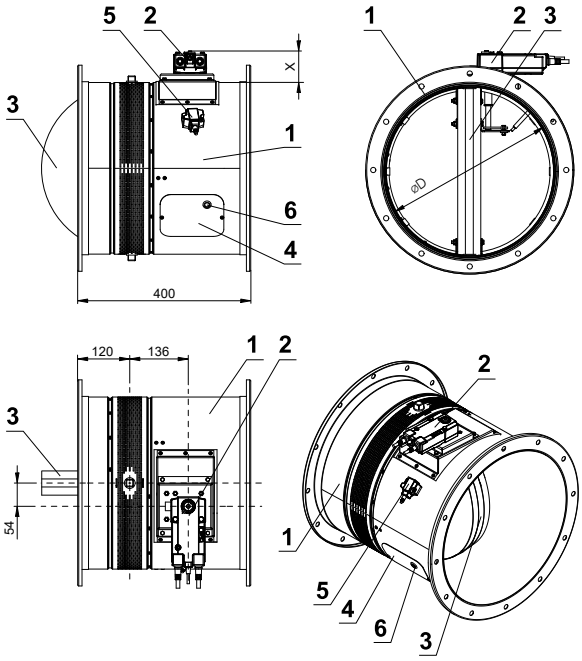

DN 560 - DN 800

The actuator cannot be rotated

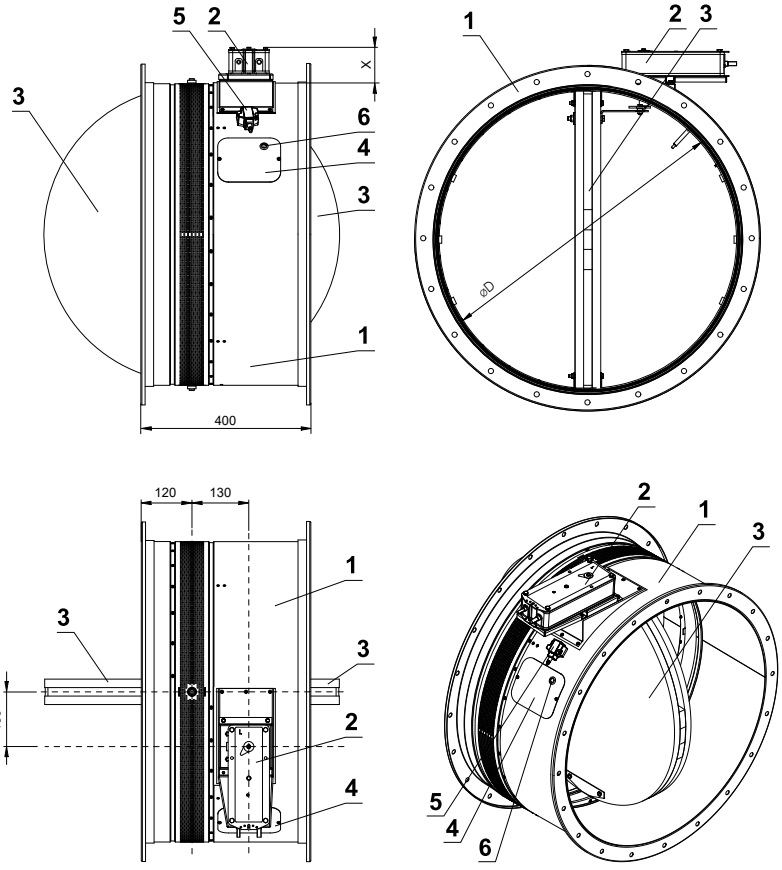

X=70 mm (BFL - DN 200 ÷ DN 315) *
X=53 mm (BFL - DN 355 ÷ DN 400) *
X=72 mm (BFN) *
X=78 mm (BF) *

1 Damper casing
2 Spring return actuator
3 Damper blade
4 Inspection opening cover
5 Thermoelectric activation device BAT
6 Hole for camera

■ Assigment of actuators to individual sizes → see page 19

Damper blade overlaps

- Open damper blade overlaps the damper casing by the value “a” or “c”. These values are specified in chapter Technical parameters → see page 19

Spiro design

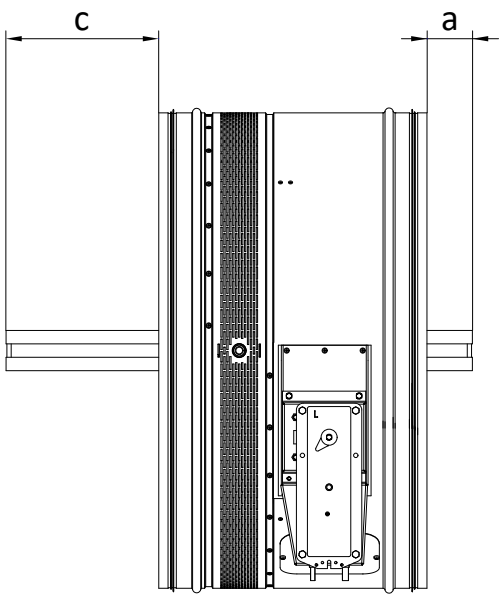

Flange design

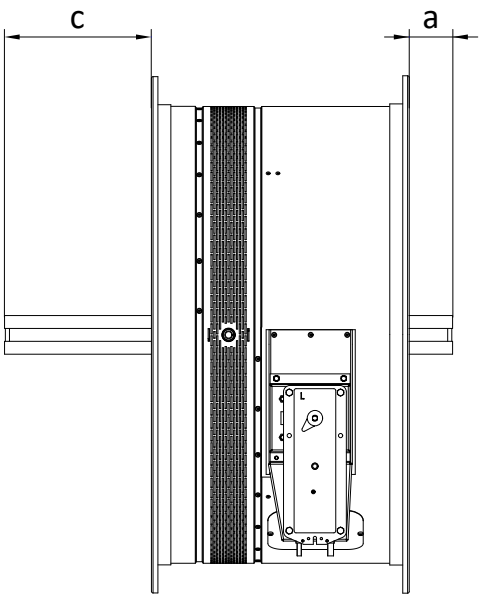

Values "a" and "c" has to be respected when projecting following air-conditioning duct.

Fire damper with installation brackets

- Weight of the installation bracket is 0,06 kg.
- Number of installation brackets for individual sizes → see page 19

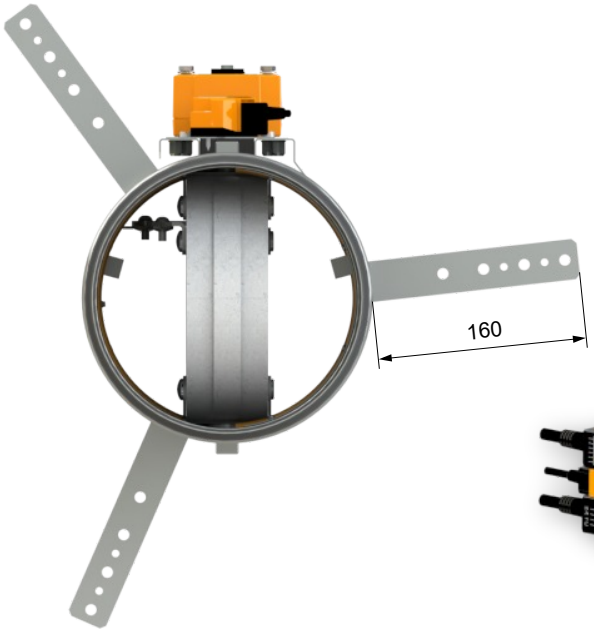

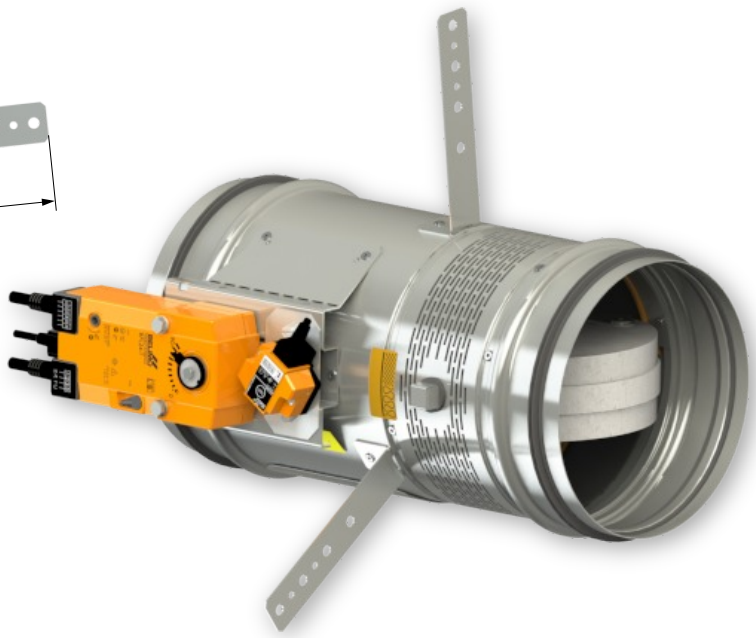

Technical parameters

Nominal size ØD [mm]	Damper blade overlaps		Weight		Number of installation brackets *	Free area S_f [m^2]	Spring return actuator	Manual control
	a [mm]	c [mm]	Man. control [kg]	Spring return actuator [kg] ***				
200	-	-	5,4	5,6	3	0,0137	BFL	M2
225	-	-	6,1	6	3	0,0197	BFL	M2
250	-	-	6,8	7	3	0,0268	BFL	M2
280	-	12	7,8	8	3	0,0365	BFL	M2
300	-	23	8,5	8,7	3	0,0438	BFL	M2
315	-	30	9	9,2	3	0,0497	BFL	M2
350**	-	48	11,5	11,6	3	0,0648	BFL	M2
355	-	50	11,6	11,7	3	0,0671	BFL	M2
400	-	73	13,6	13,8	3	0,0897	BFL	M2
450	-	98	15,9	16,3	3	0,1185	BFN	M3
500	-	123	18,5	18,9	3	0,1512	BFN	M3
560	-	153	21,7	22,1	3	0,1957	BFN	M3
600	13	173	24,3	26,4	3	0,2284	BF	M4
630	28	188	24,7	26,8	3	0,2547	BF	M4
710	68	228	32	34,3	4	0,3305	BF	M4
800	113	273	38,2	40,4	4	0,4289	BF	M5

** Weight of an installation bracket is 0,06 kg.*
*** Only spiro design SL or SK can be ordered.*
**** For designs with BKN a weight of 0.5 kg must be added.*

IV. INSTALLATION

Placement and installation

- The fire dampers are suitable for installation in arbitrary position in vertical and horizontal passages of fire separating constructions. The damper installation procedures must be done so that all load transfer from the fire separating constructions to the damper is absolutely excluded. Following air-conditioning duct must be suspended or supported so that all load transfer from the following duct to the fire damper is absolutely excluded. The gap between the installed damper and the fire separating construction must be perfectly filled with approved material.
- The damper must be installed so that the damper blade (in closed position) is situated in the fire separating construction - marked by the label BUILT-IN EDGE on the damper casing. If such solution is not possible, the duct between the fire separating construction and the damper blade must be protected according to the certified installation method → see pages 22 to 23
- During the installation and plastering process, the actuating mechanism must be protected (covered) against damage and pollution. The damper casing should not be deformed during bricking in. Once the damper is built in, the damper blade should not grind against the damper casing during opening or closing.
- The distance between the fire damper and the construction (wall, ceiling) must be 75 mm at the minimum, according to EN 1366-2. If two or more dampers are to be installed in one fire separating construction, the distance between adjacent dampers must be 200 mm at the minimum, according to EN 1366-2.

Minimum distance between the fire dampers and the construction

- minimum distance 200 mm between dampers, according to EN 1366-2
- minimum distance 75 mm between damper and construction (wall/ceiling), according to EN 1366-2
- recommended minimum distance 150 mm necessary for access to the actuator
- recommended minimum distance 250 mm necessary for access to the manual control

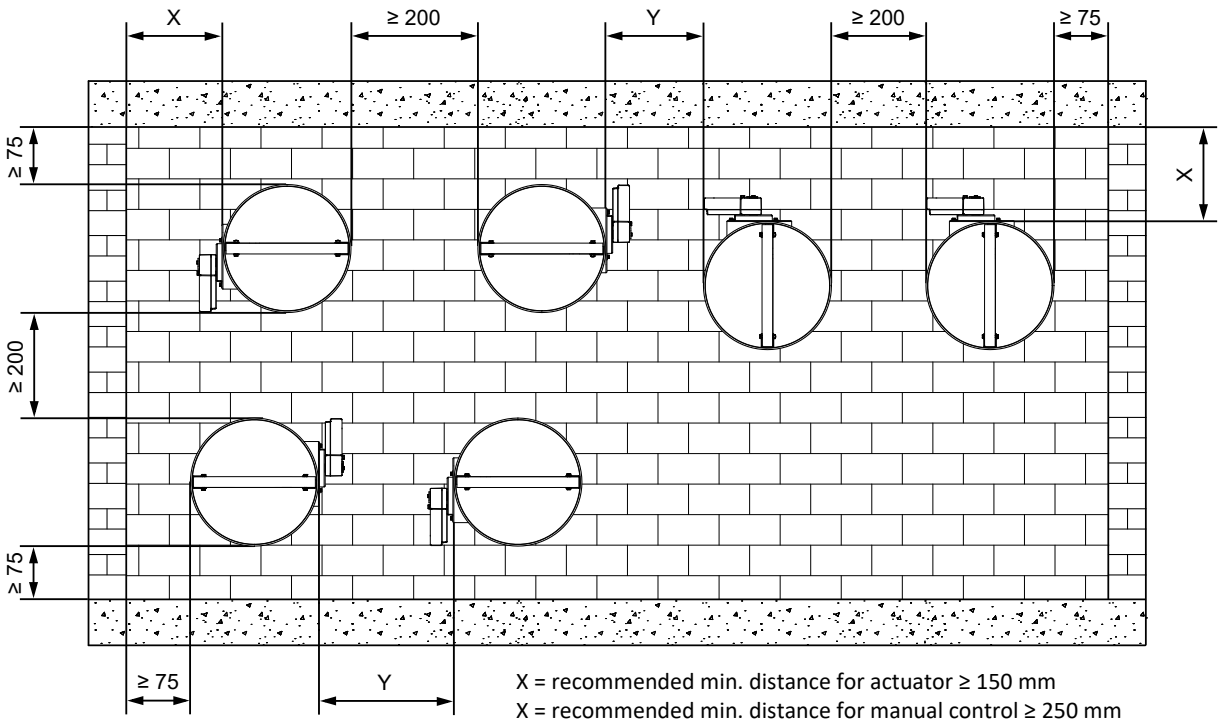

X = recommended min. distance for actuator ≥ 150 mm
X = recommended min. distance for manual control ≥ 250 mm

Y = min. distance for actuator ≥ 200 mm acc. to EN 1366-2
Y = recommended min. distance for manual control ≥ 250 mm

Built in edge

Spiro design

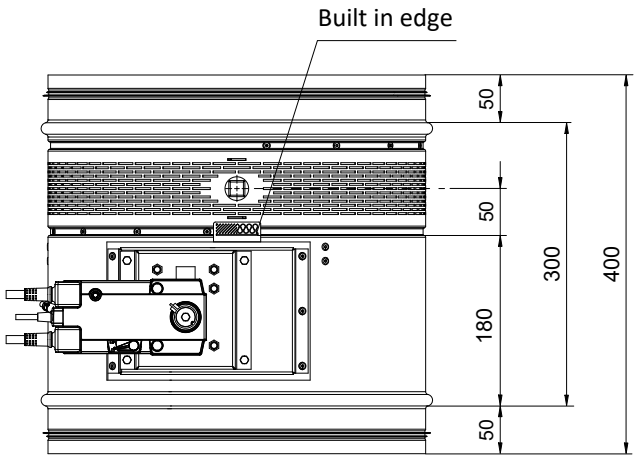

Flange design

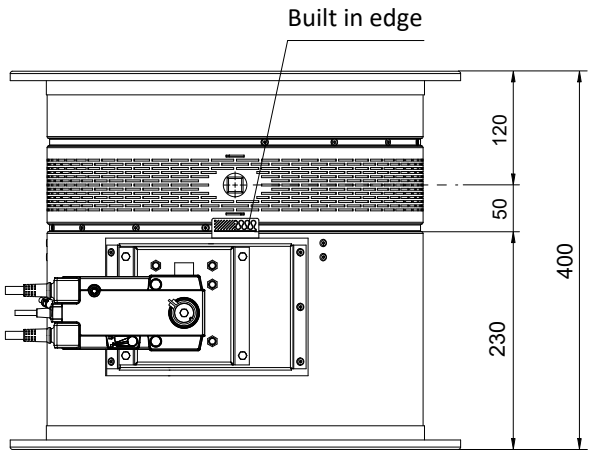

Dimensions of an installation opening

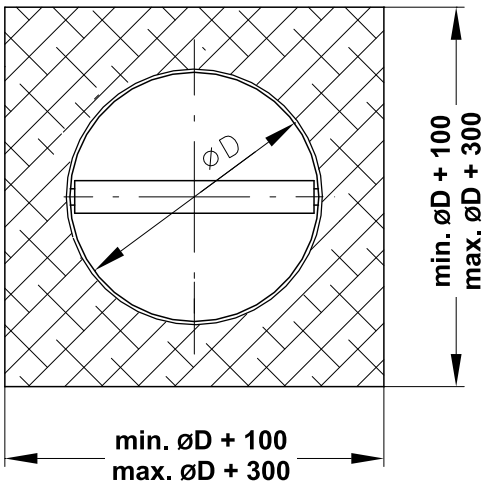

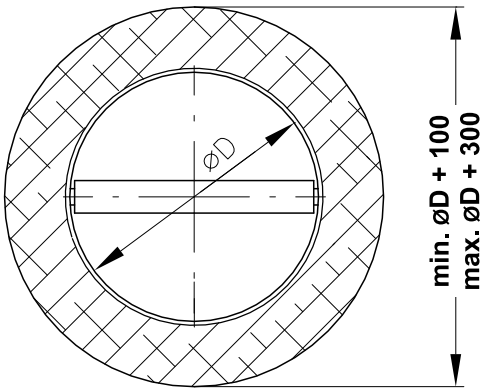

Statement of installations

Installation	wall/ceiling min. thickness [mm]	Method of installation	Fire resistance	Page
In solid wall construction	150	Mortar or gypsum	EI 180 (v_e i↔o) S - 500 Pa	22
In solid ceiling construction	150	Mortar or gypsum	EI 180 (h_o i↔o) S - 500 Pa	23

In solid wall construction

In solid wall construction - mortar or gypsum

EI 180 (v_e i↔o) S - 500 Pa

- For connection of following duct → see page 26

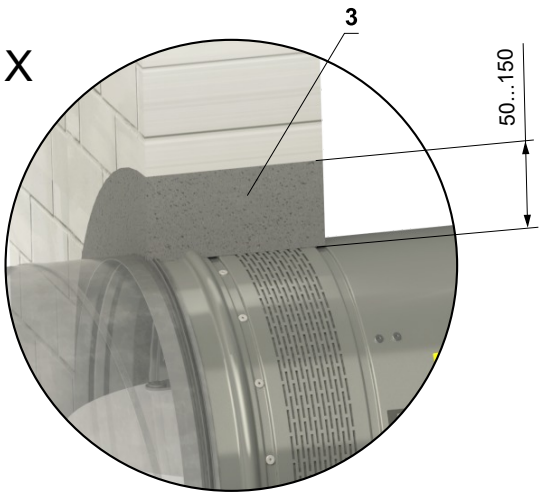

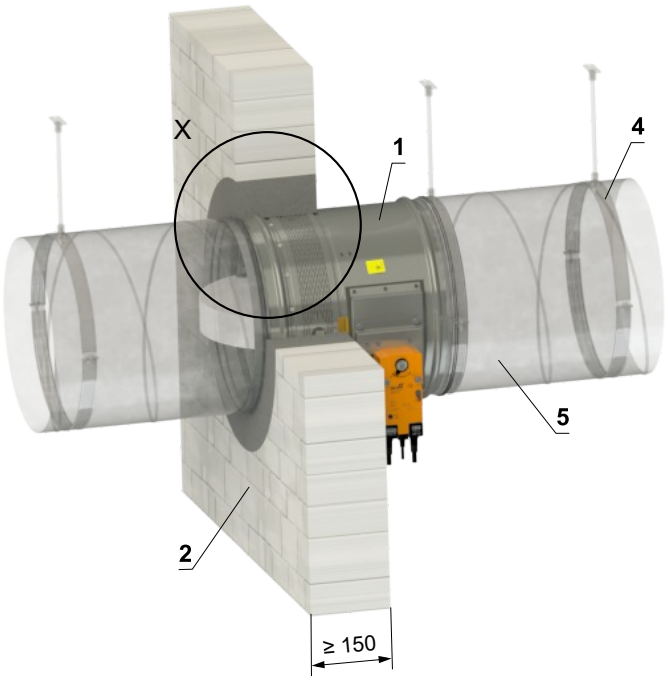

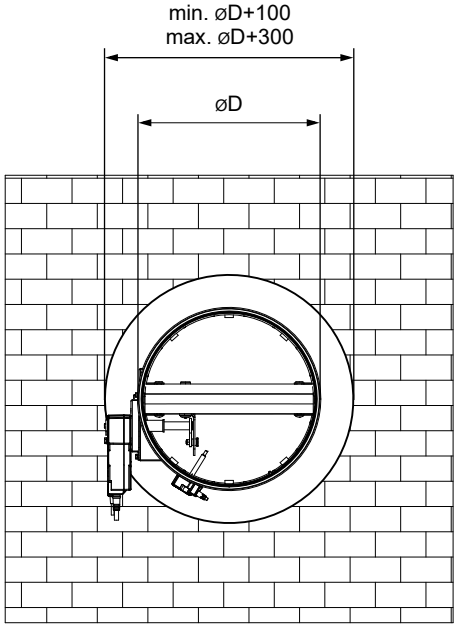

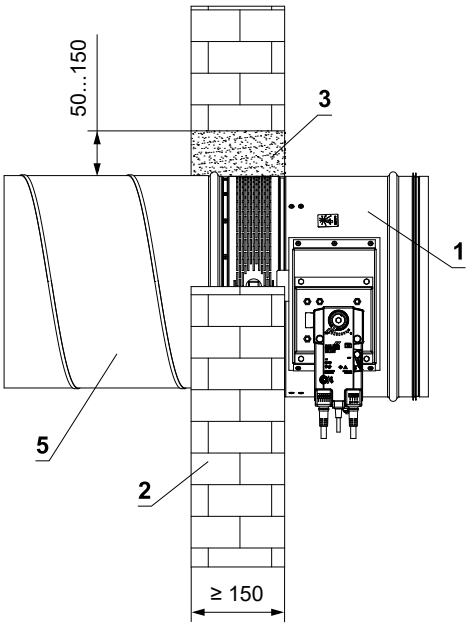

1 FDMR 180
2 Solid wall construction
3 Mortar or gypsum
4 Clamp with threaded rod → see pages 24 to 25
5 Duct

In solid ceiling construction

In solid ceiling construction - mortar or gypsum

EI 180 (h_o i↔o) S - 500 Pa

- For connection of following duct → see page 26
- The damper can be installed from both sides of the construction, i.e. from the top or the bottom side of the ceiling.

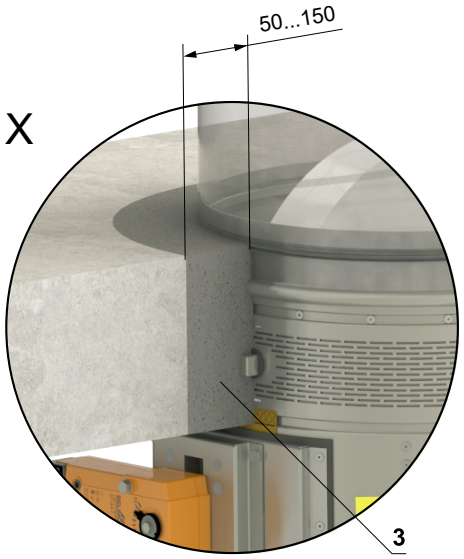

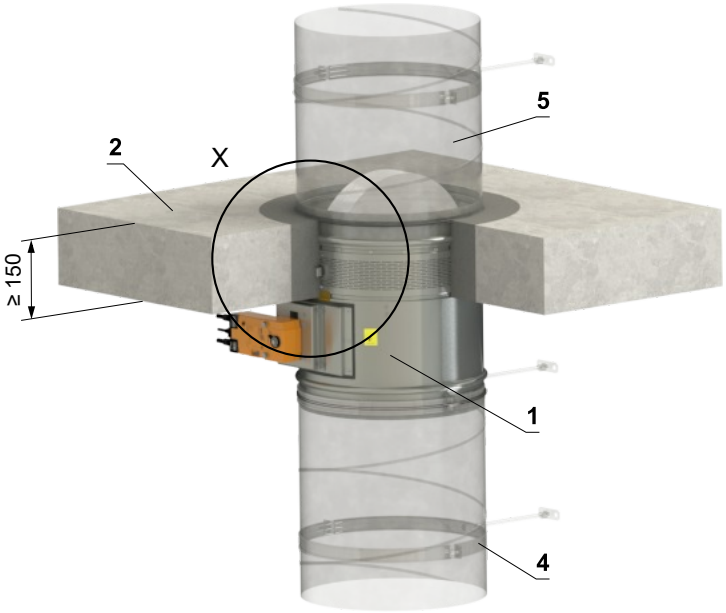

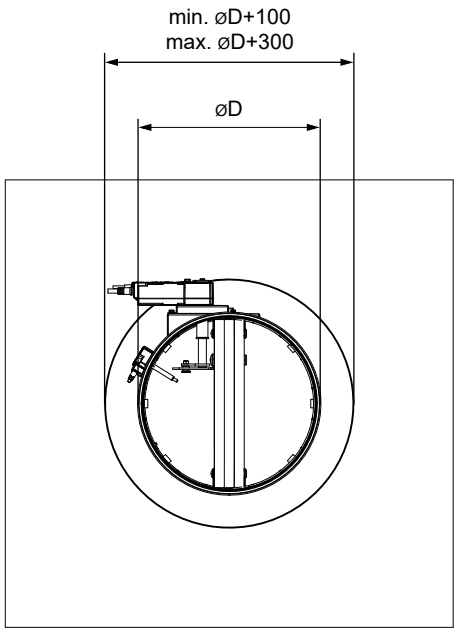

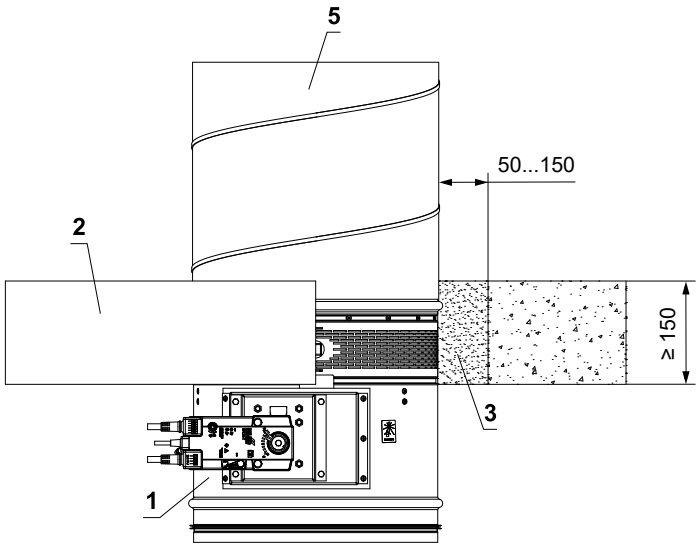

1 FDMR 180
2 Solid ceiling construction
3 Mortar or gypsum
4 Clamp with threaded rod → see pages 24 to 25
5 Duct

V. SUSPENSION SYSTEMS

Mounting to the ceiling wall

- The dampers must be suspended using threaded rods and mounting profiles. Their dimensioning depend on the weight of the damper.
- The dampers and the duct must be suspended separately.
- Following air-conditioning duct must be suspended or supported so that all load transfer from the following duct to the damper flanges is absolutely excluded. Adjacent duct must be suspended or supported, as required by the duct suppliers.

Examples of anchoring to the ceiling construction
Follow the instructions of fixing specialist or installation company

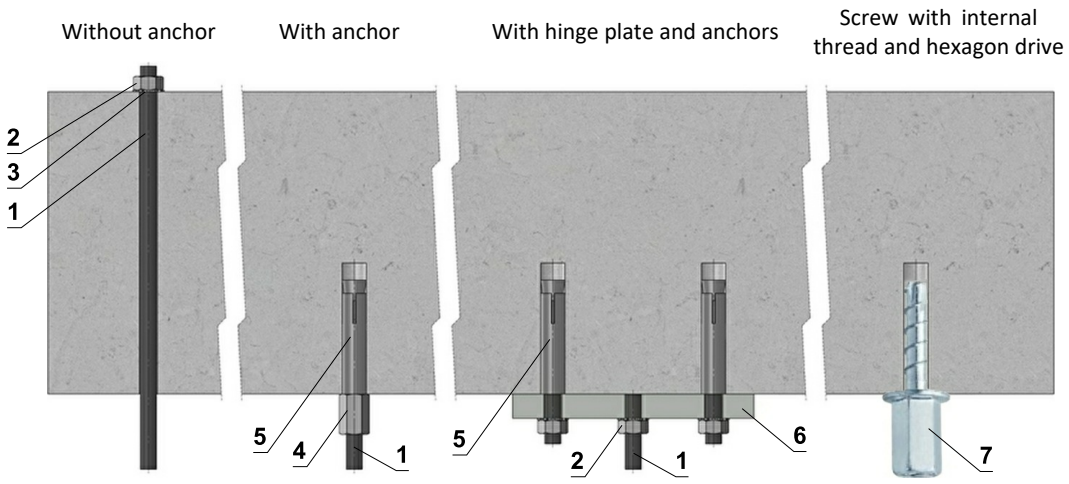

Hinge plates

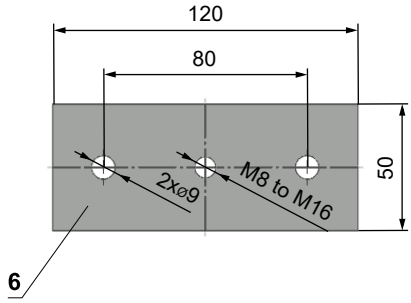

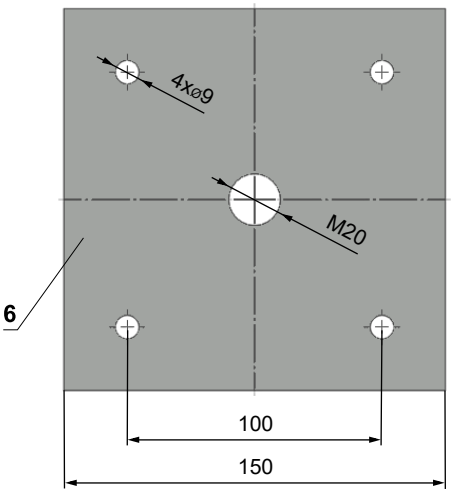

- If in doubt, always consult an anchor specialist engineer such as Halfen or Hilti.

1 Threaded rod M8 - M20
2 Nut M8 - M20
3 Washer for M8 - M20
4 Coupling Nut M8 - M20
5 Anchor
6 Hinge plate - min. thickness 10 mm
7 Concrete screw tested for fire resistance R30-R90, max. Tension up to 0.75 KN (length 35 mm)

Load capacities of threaded rods at the required fire resistance 120 min. < t ≤ 240 min.

Size	As [mm²]	Weight [kg]	
		for 1 rod	for 2 rods
M8	36,6	11	22
M10	58	17,5	35
M12	84,3	26	52
M16	157	48	96
M18	192	58,5	117
M20	245	75	150

Example of fixing FDMR 180 to the wall or ceiling

In solid wall construction

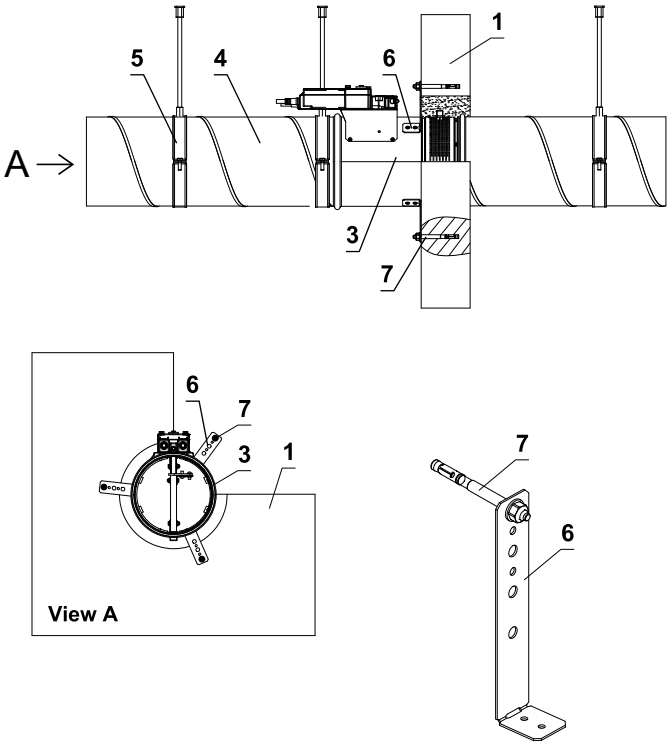

In solid ceiling construcion

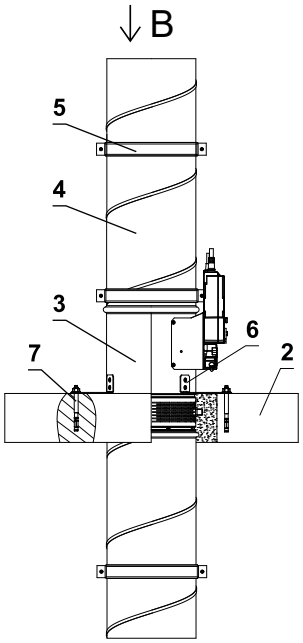

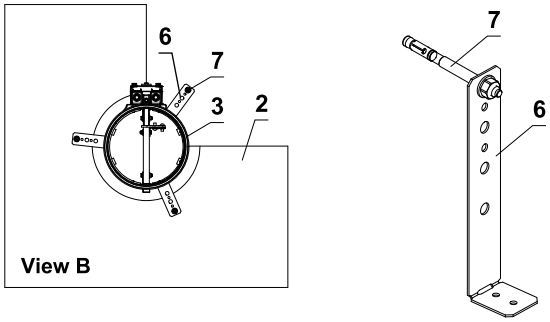

Ø200–400
t(mm): 1,5

Ø450–800
t(mm): 2,5

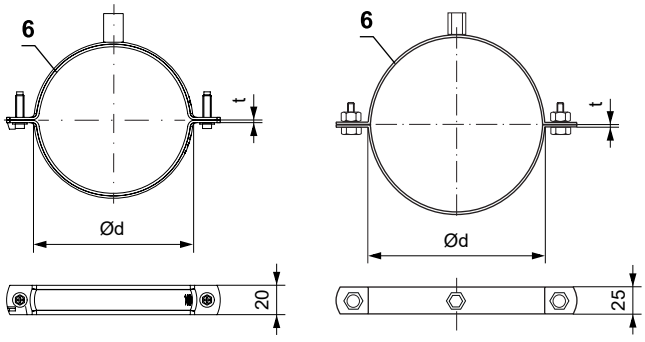

Ø200–400
Quick closing system
2x screw M6×20.
Fixing nut for threaded rod M8.

Ø450–800
2x screw connection M10x30 or threaded rods M10
Combined fixing nut for threaded rod M8+M10.

1 Solid wall construction
2 Solid ceiling construction
3 FDMR 180
4 Duct
5 Clamp with threaded rod
6 Damper bracket (according to order)
7 Nut M8 with anchor

- The method of attachment must follow the minimum requirements for attachment and connection of ductwork in accordance with national regulations. Also, the elements can be suspended from the top, or supported from bottom, or fastened from the side.

Example of duct connection

SPIRO design

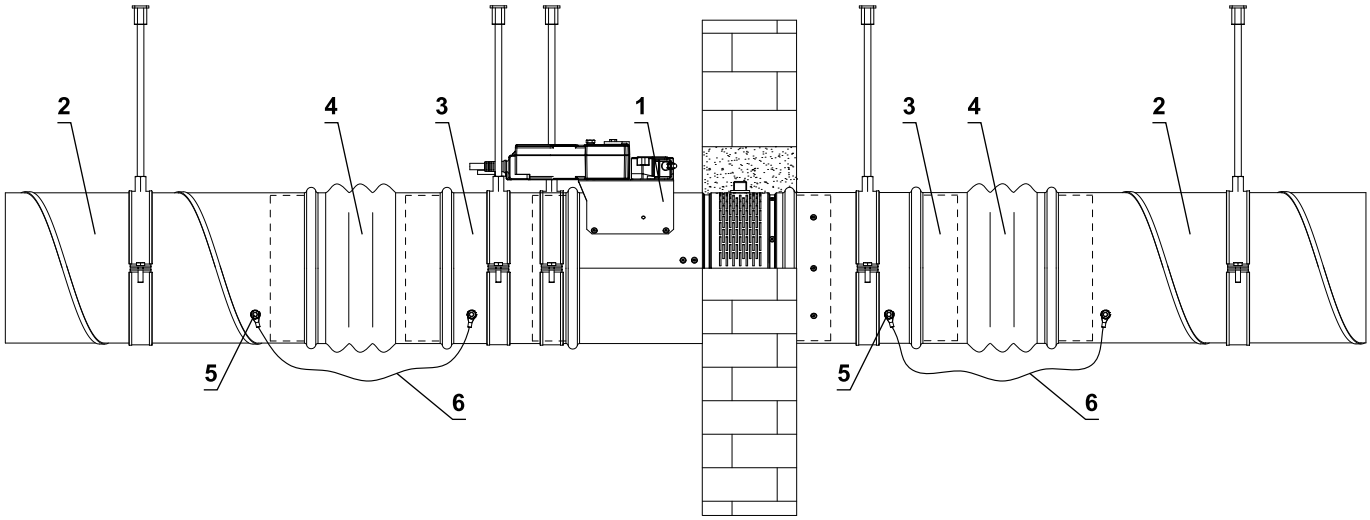

FLANGE design

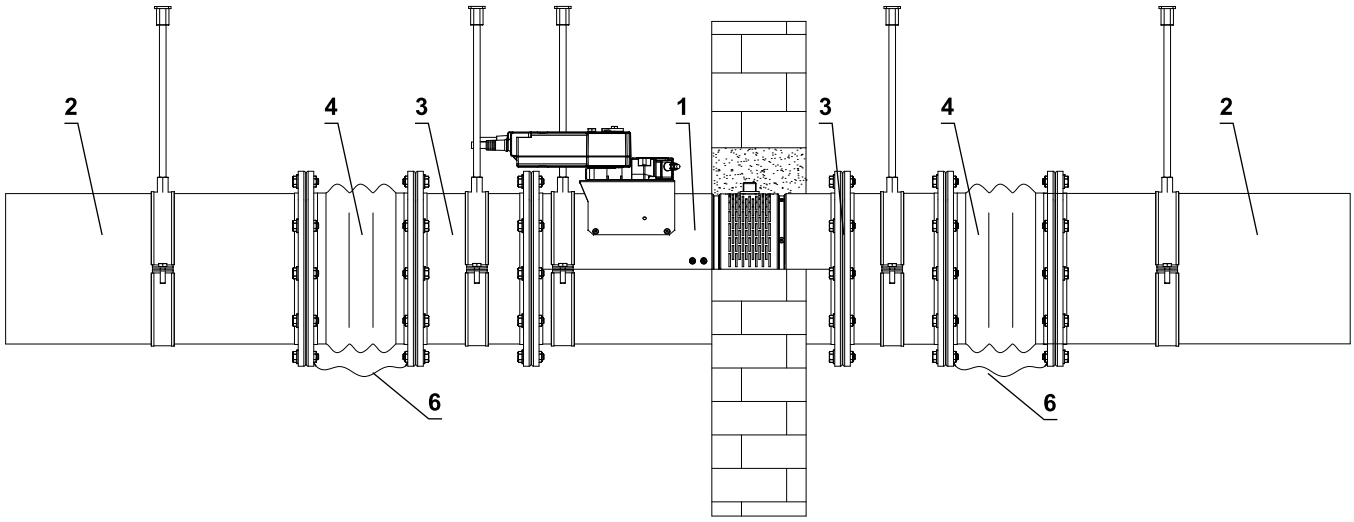

1 FDMR 180
2 Duct
3 Extension piece (if required)
4 Damping pad
5 Bolt assembly M8 (bolt M8x20 mm, 2 pcs large washer M8, nut M8)
6 Protective bonding conductor

VI. TECHNICAL DATA

Pressure loss

Pressure loss calculation

$$\Delta p = \xi \cdot \rho \cdot \frac{w^2}{2}$$

Δp	[Pa]	presure loss
w	[m/s]	air flow speed in nominal damper section
ρ	[kg/m³]	air density
ξ	[-]	coefficient of local pressure loss for the nominal damper section

Determination of pressure loss by using diagram ρ = 1,2 kg/m³

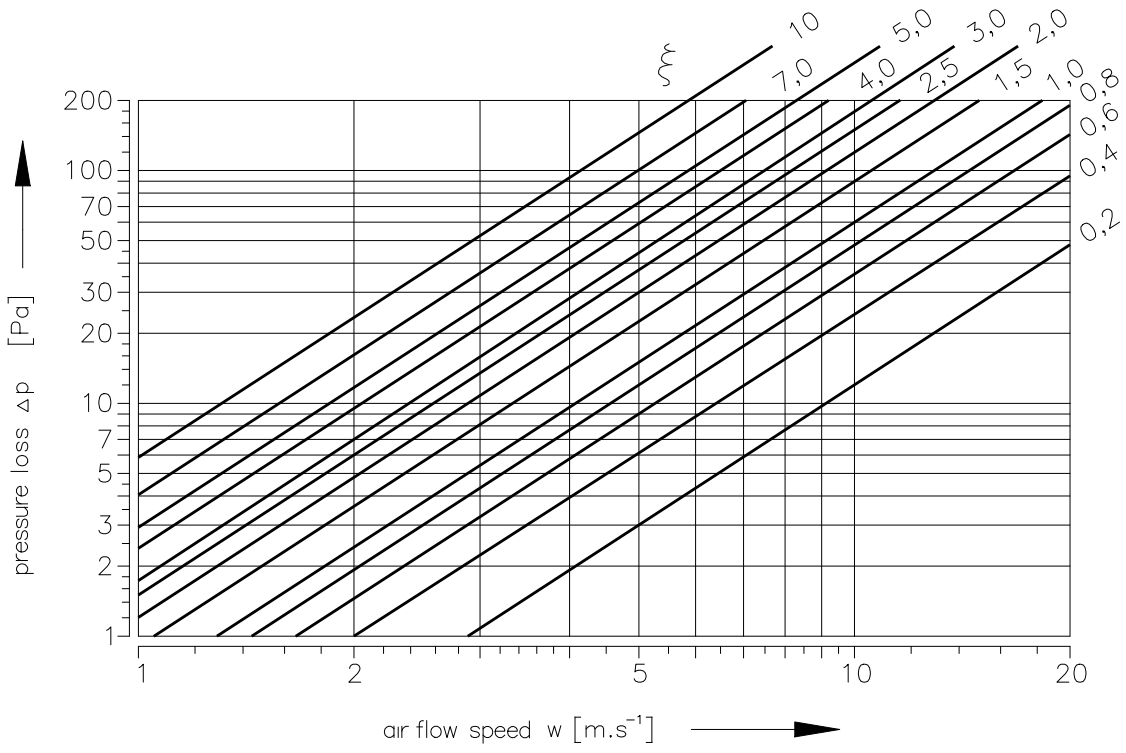

Coefficient of local pressure loss

D	200	225	250	280	300	315	350	355
ξ	1,573	1,728	1,304	1,002	0,881	0,789	0,634	0,609
D	**400**	**450**	**500**	**560**	**600**	**630**	**710**	**800**
ξ	0,504	0,426	0,370	0,322	0,300	0,280	0,121	0,106

Noise data

Level of acoustic output corrected with filter A

$$L_{WA} = L_{W1} + 10 \log(S) + K_A$$

L_{WA}	[dB(A)]	level of acoustic output corrected with filter A
L_{W1}	[dB]	level of acoustic output L_{W1} related to the 1 m^2 section
S	[m^2]	duct cross section
K_A	[dB]	correction to the weight filter A

Level of acoustic output in octave ranges

$$L_{Woct} = L_{W1} + 10 \log(S) + L_{rel}$$

L_{Woct}	[dB]	spectrum of acoustic output in octave range
L_{W1}	[dB]	level of acoustic output L_{W1} related to the 1 m^2 section
S	[m^2]	duct cross section
L_{rel}	[dB]	relative level expressing the shape of the spectrum

Tables of acoustics values

Level of acoustic output L_{W1}[dB] related to the 1 m^2 section

	ξ [-]											
w [m/s]	**0,1**	**0,2**	**0,3**	**0,4**	**0,6**	**0,8**	**1**	**1,5**	**2**	**2,5**	**3**	**3,5**
2	9	11,5	14,7	16,9	20,1	22,3	24,1	27,2	29,4	31,2	32,6	33,8
3	16,7	22,1	25,3	27,5	30,7	32,9	34,6	37,8	40	41,7	43,2	44,4
4	24,2	29,6	32,8	35	38,1	40,4	42,1	45,3	47,5	49,2	50,7	51,9
5	30	35,4	38,6	40,8	44	46,2	47,9	51,1	53,3	55,1	56,5	57,7
6	34,8	40,2	43,3	45,6	48,7	51	52,7	55,8	58,1	59,8	61,2	62,4
7	38,8	44,2	47,3	49,6	52,7	55	56,7	59,9	62,1	63,8	65,2	66,4
8	42,3	47,7	50,8	53,1	56,2	58,4	60,2	63,3	65,6	67,3	68,7	69,9
9	45,4	50,7	53,9	56,1	59,3	61,5	63,3	66,4	68,6	70,4	71,8	73
10	48,1	53,5	56,6	58,9	62	64,3	66	69,1	71,4	73,1	74,5	75,7
11	50,6	56	59,1	61,4	64,5	66,7	68,5	71,6	73,9	75,6	77	78,2
12	52,8	58,2	61,4	63,6	66,8	69	70,7	73,9	76,1	77,9	79,3	80,5

Correction to the weight filter A

w [m/s]	**2**	**3**	**4**	**5**	**6**	**7**	**8**	**9**	**10**	**11**	**12**
K_A [dB]	-15	-11,8	-9,8	-8,4	-7,3	-6,4	-5,7	-5	-4,5	-4	-3,6

Relative level expressing the shape of the spectrum L_{rel}

	f [Hz]							
w [m/s]	**63**	**125**	**250**	**500**	**1000**	**2000**	**4000**	**8000**
2	-4,5	-6,9	-10,9	-16,7	-24,1	-33,2	-43,9	-56,4
3	-3,9	-5,3	-8,4	-13,1	-19,5	-27,6	-37,4	-48,9
4	-3,9	-4,5	-6,9	-10,9	-16,7	-24,1	-33,2	-43,9
5	-4	-4,1	-5,9	-9,4	-14,6	-21,5	-30,0	-40,3
6	-4,2	-3,9	-5,3	-8,4	-13,1	-19,5	-27,6	-37,4
7	-4,5	-3,9	-4,9	-7,5	-11,9	-17,9	-25,7	-35,1
8	-4,9	-3,9	-4,5	-6,9	-10,9	-16,7	-24,1	-33,2
9	-5,2	-3,9	-4,3	-6,4	-10,1	-15,6	-22,7	-31,5
10	-5,5	-4	-4,1	-5,9	-9,4	-14,6	-21,5	-30
11	-5,9	-4,1	-4	-5,6	-8,9	-13,8	-20,4	-28,8
12	-6,2	-4,3	-3,9	-5,3	-8,4	-13,1	-19,5	-27,6

VII. MATERIAL, FINISHING

- Damper casings are made from galvanized sheet metal without further surface treatment.
- Damper blades are made from fire resistant asbestos free boards made of mineral fibres.
- Manual control have cover made of mechanically resistant and durable plastic and the other parts are galvanized without further surface treatment.
- Fusible links are made of sheet brass, thickness 0,5 mm.
- Fasteners and springs are galvanized.
- According to the customer's requirements, dampers can be made of stainless steel material.

  Specifications for stainless-steel design:

  - Class A2 – Food-grade stainless steel (AISI 304 – EN 1.4301)
  - Class A4 – Chemistry-grade stainless steel (AISI 316, 316L – EN 1.4401, EN 1.4404)

  The respective stainless steel is the material for all components that are located or entering the damper inner space; components outside the damper casing are typically from galvanised sheet metal (fasteners for mounting the actuator or manual control, mechanical components except Item 4), frame components.

  The following components, including the fasteners, are made from stainless steel at all times:

  1) Damper casing and all components permanently attached
  2) Blade holders including pins, metal parts of blades
  3) Control components inside the damper (L-profile, pin with lever, rod, fasteners)
  4) Parts of a manual contol entering the inner space of a damper casing (lower sheet of a manual control, lock holder “1”, lock lever “2”, closing spring, 8 dia. stopper pin, manual control pin)
  5) Inspection opening cover including the stirrup and fasteners (if they are parts of the cover)
  6) Bearing for torque transfer from the lever with pin on the blade L-profile (made from AISI 440C)

  The damper blade is made from a three boards of Promatect-H, thickness 20 mm, connected with galvanised nailed “U” connectors which are sealed with Promat K84 from the outside.

  Fusible link is identical for all material variants of the dampers. Upon specification by customer, the fusible link can be made from A4 from stainless steel sheet metal.

  Thermoelectric activation device BAT is modified for stainless-steel variant of the dampers; standard galvanised screws are replaced with stainless-steel M4 screws of corresponding class. Damper casing has stainless-steel riveting M4 nuts.

  Plastic, rubber and silicon components, sealants, foaming tapes, glass-ceramic seals, housings, brass bearings of the blade, actuators, and end switches are identical for all material variants of the dampers.

  Some fasteners and components are only available in one class of stainless steel; the type will be used in all stainless-steel variants.

  The damper blade in the variant for chemical environments (Class A4) is always treated with a coating of chemically resistant Promat SR.

  Any other requirements for the design will be considered atypical and will be addressed on an individual basis.

VIII. TRANSPORTATION, STORAGE AND WARRANTY

Logistic terms

- Dampers are delivered on pallets. As standard, the dampers are wrapped in plastic foil for protection during transport and must not be used for long-term storage. Temperature changes during transport can cause condensation of water inside the packaging and thereby cause corrosion of materials used in the dampers (e.g. white corrosion on zinc-coated items or mould on calcium silicate). Therefore, it is necessary to remove the transport packaging immediately after unloading to allow air to circulate around the product.
- The dampers must be stored in clean, dry, well ventilated and dust-free environment out of direct sunlight. Ensure protection against moisture and extreme temperatures (minumum temperature +5°C). The dampers must be protected against mechanical and accidental damage prior to installation.
- Another required packaging system should be approved and agreed by manufacturer. Packaging material is not returnable in case that another packaging system (material) is required and used and it is not included into final price of damper.
- Dampers are transported by box freight vehicles without direct weather impact, there must not occur any shocks and ambient temperature must not exceed +50°C. Dampers must be protected against impact when transported and manipulated. During transportation, the damper blade must be in the "CLOSED" position.
- Dampers must be stored indoor in environment without any aggressive vapours, gases or dust. Indoor temperature must be in the range from -30°C to +50°C and maximum relative humidity 95%.

Warranty

- The manufacturer provides a warranty of 24 months from the date of dispatch for the dampers.
- In case of using a Schischek actuator, the manufacturer provides a 12-month warranty for the actuator from the date of shipment.
- The warranty for fire dampers FDMR 180, provided by the manufacturer, is completely void if actuating, closing and control devices are unprofessionally handled by untrained workers or if electric components, i.e. limit switches, actuators, communication and supply devices and thermoelectric activation devices are dismounted.
- The warranty is void if dampers are used for other purposes, devices and working conditions than those allowed by these technical conditions or if the dampers are mechanically damaged during handling.
- If the dampers are damaged by transport, a record must be written down with the forwarder at reception for later complaint.

IX. ASSEMBLY, ATTENDANCE AND MAINTENANCE

- Assembly, maintenance and damper function check can be done only by qualified and trained person, i.e. “AUTHORIZED PERSON” according to the manufacturer documentation. All works done on the fire dampers must be done according international and local norms and laws.
- All effective safety standards and directives must be obse-rved during damper assembly.
- To ensure reliable damper function it is necessary to avoid blocking the actuating mechanism and contact surfaces with collected dust, fibre and sticky materials and solvents.
- Flange and screw joints must be conductively connected to protect against dangerous contact. 2 galvanized lock washers that are placed under the head of one screw and a fastened nut are used for conductive connection.

Manual operation - actuator control without electric voltage

- A special wrench (part of the actuator) can be used to manually turn the damper blade to any position. When the wrench is turned in the direction of the arrow, the damper blade rotates to its open position. As the blade rotation is stopped, in every position, the actuator will be locked. Unlocking is possible even manually as per instructions on the actuator, or by the activation of the supply voltage.
- If the actuator is manually locked, the damper blade will not close in the event of a fire after the activation of the thermoelectric activation device BAT. To restore correct damper operation, the actuator must be unlocked (manually or by applying power supply).

Limit switches

- If the damper is equipped with limit switches and these switches are not used during operation (e.g. because of a project change), they can be left on the damper and not connected (they need not be dismounted).
- On the other hand, if the limit switch is to be added to the damper design, the change can be implemented by change kit.
- These facts must be recorded in the respective operation documentation of the damper (record books of the damper, fire logs, etc.) and subsequently, adequate function checks must be carried out.

Installation / fixing the damper

- The damper casing shall not be deformed in the course of bricking in.
- Once the damper is built in, the damper blade shall not grind on the damper casing during opening or closing.

Protection of the damper casing against buckling during installation, especially for DN over 400 mm!

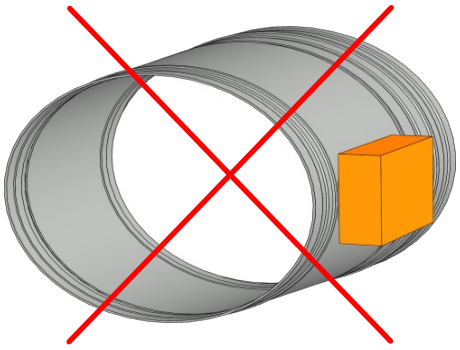

WRONG!

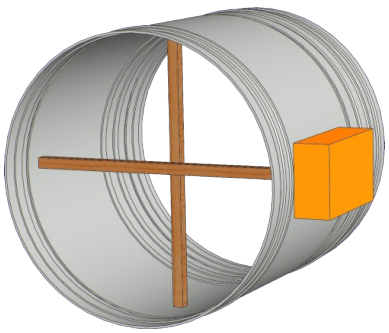

Brace with wooden blocks

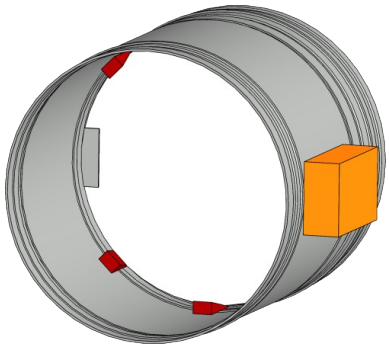

Brace with wedges

Change of manual control for the actuator or vice versa

DN 200 - DN 315

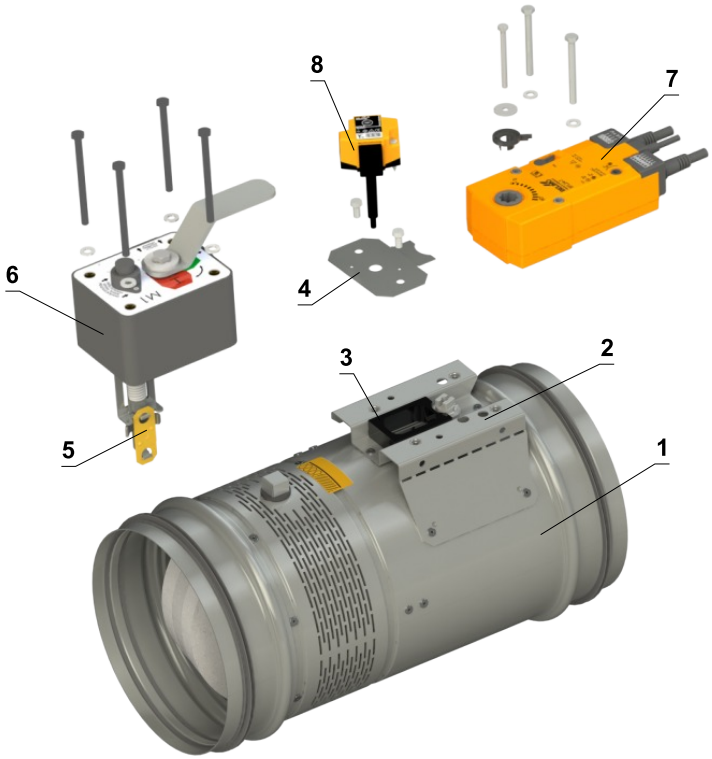

1 Damper
2 Mounting plate
3 Sealing of a mounting plate
4 Holder of thermoelectric activation device BAT
5 Fusible link
6 Manual control
7 Spring return actuator
8 Thermoelectric activation device BAT

DN 350 - DN 800

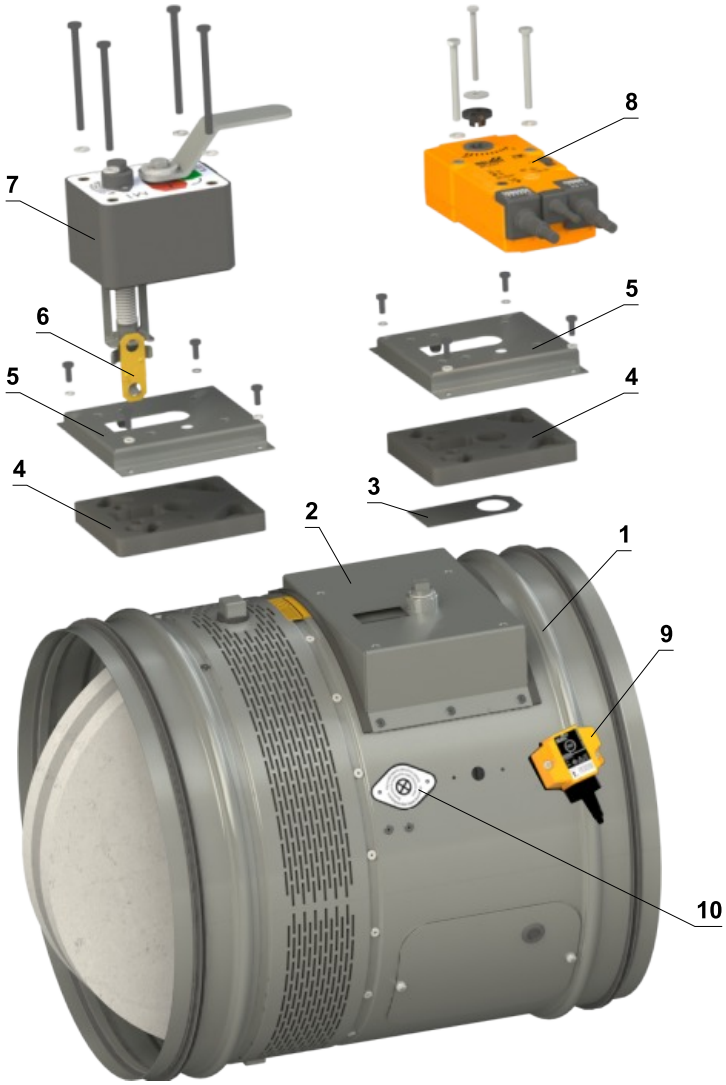

1 Damper
2 Mounting plate
3 Sealing cover
4 Sealing of a mounting plate
5 Cover of mounting plate
6 Fusible link
7 Manual control
8 Spring return actuator
9 Thermoelectric activation device BAT
10 Sensor sticker

Commissioning and revisions

- Before putting the damper into operation, serviceability checks and functional tests must be carried out including testing of functionality of all electrical elements. After putting into operation these serviceability checks must be carried at least twice a year. If no defect is found during two subsequent serviceability checks, these checks can be carried out once a year.
- In case that dampers are found unable to serve for their function for any cause, it must be clearly marked. The operator is obliged to ensure that the damper is put into condition in which it is ready for function and meanwhile he is obliged to provide the fire protection by another appropriate way.
- Results of regular checks, imperfections found and all-important facts connected with the damper function must be recorded in the "FIRE BOOK" and immediately reported to the operator.
- Before entering the dampers with actuator into operation after their assembly and by sequential checks. Check of blade rotation into the breakdown position "CLOSED" can be done after disconnecting the actuator supply (e.g. by pressing the test button at the thermoelectric activation device BAT or disconnecting the supply from ELECTRICAL FIRE SIGNALISATION). Check of blade rotation back into the "OPEN" position can be done after restoration of power supply (e.g. by releasing the test button or restoration of supply from ELECTRICAL FIRE SIGNALISATION). Without power supply, the damper can be operated manually and fixed in any required position. Release of the locking mechanism can be achieved manually or automatically by applying the supply voltage. It is recommended to provide periodical checks, maintenance and service actions on fire equipment by authorized persons. The authorized persons can be trained by producer, or by authorized distributor. All effective safety standards and directives must be observed during fire damper assembly.
- Visual inspection of proper damper installation, inner area of a damper, damper blade, contact surfaces and silicon seal.
- For regular or exceptional inspection of interior of fire damper, micro-camera device can be used. On each fire damper is an inspection opening. In the case of inspection by camera, take out the black rubber cap, insert the camera inside the damper, check interior and at the end of inspection, put the rubber cap back tightly to cover the empty hole.

For dampers with manual control, following checks must be carried out

Check of a manual control and fusible link

- **To check the function of the manual control proceed as follows:**
- Turn the damper blade to "CLOSED" position as follows:
  - The damper blade is in "OPEN" position.
  - Press the control button of the manual control to turn the damper blade to "CLOSED" position.
  - Check the damper blade rotation to "CLOSED" position.
  - Damper blade closing shall be smooth and fast, the control lever shall be in „CLOSED“ position.
- Turn the damper blade to "OPEN" position as follows:
  - Turn the control lever by 90°.
  - Check the damper blade rotation to "OPEN" position.
  - The lever will automatically lock in "OPEN" position.
- **Check of function and condition of the fusible link:**
  - To check the function and the status of the fuse it's possible to remove the manual control from the casing of the fire damper which is attached to the damper casing with four screws M6.
  - Removing the fusible link from the fuse holder of a manual control, checks its correct functionality.
  - The manual control is identified as M2 to M5, depending on the closing spring strength.

For dampers with actuators, following checks must be carried out

- Check the rotation of the blade to "CLOSED" failure position after disconnection the power supply of the actuator (e.g. by pressing the test button on the thermoelectric activation device BAT or by disconnection the power supply from electrical fire signalization). Check the rotation of the blade back to "OPEN" position by restoring the power supply to the actuator (e.g. by releasing the test button or by restoring the power supply from electrical fire signalization).

Before putting the dampers into operation and during subsequent function checks, the following checks must be carried out for dampers with optical smoke detector

- The function checks of the optical smoke detector are to be carried out by employees of an authorized organization who have corresponding electrotechnical qualification and have been properly trained by the manufacturer. The function checks are to be carried out as a part of function checks of the fire dampers, at least 1x a year.
- For the function checks, the damper blade should be in "CLOSED" position with the fan off or with closed air regulation situated between the fan and the fire damper.

- Inspection opening disassembly
  - Unscrew the screws (2pcs) and remove the cover by tilting it.



Inspection opening detail

- Ensure each damper is fully checked for operational capability, control should be initiated from the control system or by manual control. Damper blades should open and close correctly and operation should be visually inspected and documented prior to handover.

How to proceed after Tf1 or Tf2 fuses have been activated

- If the fusible link **Tf1** is interrupted (due to temperature outside the duct), it is necessary to replace the spring return actuator. → see page 10
- If the fusible link **Tf2** is interrupted (due to temperature inside the duct) , only the spare part ZBAT 72 (95/120/140) needs to be replaced (acc.to the activation temperature). → see page 10

X. ORDERING INFORMATIONS

Ordering key

1	2	3		4	5	6	7	8		9	10	11
FDMR 180	EN	DN 200*	/	300	.40	104	H	RS	-	ZN	IW	G

** Dimension DN 350 can only be ordered for circular pipes in RS design.*

EXAMPLES:

FDMR 180 EN DN 200/300 .40 RS-ZN

Fire damper FDMR 180, dimension DN 200 mm, built length 300 mm, control design with spring return actuator AC 230 V, standard activation temperature 72 °C, without installation kit, connection to straight circular duct, galvanized material variant, standard silicon seal.

FDMR 180 EN DN 200/300 .01 104 H RS-ZN IW G

Fire damper FDMR 180, dimension DN 200 mm, built length 300 mm, control design with manual control, activation temperature 104 °C, with installation holders, connection to straight circular duct, galvanized material variant, impregnation against humidity, Silicone-free rubber.

1| Fire damper type - FDMR 180

2| Country of destination

3| Damper dimensions øD → see page 19

4| Built length - 300 mm

5| Damper design

.01	Manual control and thermal
.11	Manual control and thermal with a terminal switch („CLOSED“)
.80	Manual control and thermal with two terminal switches („OPEN“, „CLOSED“)
.40	With actuator BF 230-TN (BFL, BFN 230-T) - voltage AC 230 V
.41 **	With actuator BF 24-TN (BFL, BFN 24-T), with smoke detector ORS 142 K and with supply device BKN 230-24-MOD (voltage AC 230 V)
.50	With actuator BF 24-TN (BFL, BFN 24-T) - voltage AC/DC 24 V
.51 **	With actuator BF 24-TN (BFL, BFN 24-T), with smoke detector ORS 142 K (voltage AC/DC 24 V)
.63	With communication and supply device BKN 230-24-MOD, with actuator BF 24-TN-ST (BFL, BFN 24-T-ST)
.63S **	With communication and supply device BKN 230-24-MOD, with actuator BF 24-TN-ST (BFL, BFN 24-T-ST) and with smoke detector ORS 142 K

*** The smoke detector is not part of the damper in diameter DN 200 mm. The smoke detector is supplied separately.*

6| Activation temperature

Manual control		Spring return actuator control	
	72 °C *		72 °C *
104	104 °C	95	95 °C
147	147 °C	120	120 °C
		140	140 °C

** Standard activation temperature*

7| Installation kit

	Without installation kit
H	Installation holders

8|Duct connection

RS	Straight connection to circular duct
RF	Flanged connection to circular duct

9| Material and other design options

ZN	Galvanized
A2	Stainless steel 1.4301 (AISI 304)
A4	Stainless steel 1.4404 (AISI 316L) - included damper blade impregnation against chemical - type PROMAT SR

10| Surface treatment

	Without surface treatment
IW	Damper blade impregnation, impregnating agent PROMAT 2000 - impregnation against humidity
IA	Damper blade impregnation, impregnating agent PROMAT SR - impregnation against chemical

11| Cold seal variant

	Silicone rubber *
G	Silicone-free rubber

** Standard cold seal*

Accessories

Installation holder



1| Accessory type - installation holder

2| Fire damper type - FDMR 180

Data label

- Data label is placed on the damper casing (example)

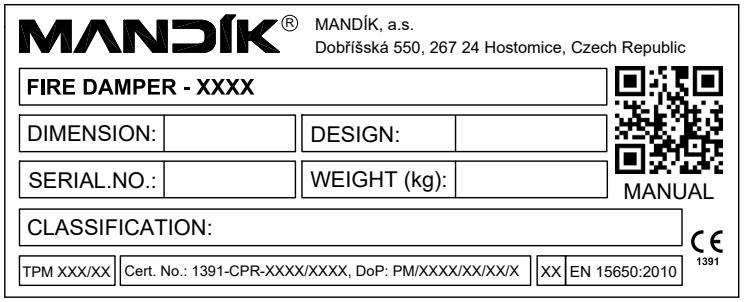

The producer reserves the right for innovations of the product.
For actual product information see www.mandik.com

MANDÍK®

www.mandik.com



MANDÍK, a. s. • Dobříšská 550 • 267 24 Hostomice • Czech Republic • Tel.: +420 311 706 742 • E-Mail: mandik@mandik.cz