MANDÍK

TPM 119/16
Version 2026-10-15

RKALM

Rectangular regulation/adjustment damper

Technical Documentation
Installation, Commissioning, Operation, Maintenance and Service Manual

MANDÍK®
www.mandik.com

MANDÍK, a.s. • Dobříšská 550 • 267 24 Hostomice • Czech Republic • Tel.: +420 311 706 742 • E-Mail: mandik@mandik.cz

These technical conditions define the scope of produced dimensions and versions of "ALUMINIUM REGULATION DAMPER RKALM" ("damper"). These technical conditions apply to the manufacture, design, ordering, assembly, operation and maintenance.

I. CONTENT

II. GENERAL **3**

1. Description..... 3
2. Design..... 3
3. Dimensions and weights..... 5
4. Placement and installation..... 11

III. TECHNICAL DATA **11**

5. Electrical elements, wiring diagram..... 11
6. Pressure loss..... 14

IV. MATERIAL, FINISHING **15**

7. Material..... 15

V. INSTALLATION, OPERATION, INSPECTION AND TESTING **15**

8. Incorrect use..... 15
9. Installation..... 15
10. Maintenance..... 16
11. Inspection..... 16
12. Testing..... 16

VI. PACKING, TRANSPORT AND STORAGE **16**

13. Logistical data..... 16

VII. ASSEMBLY **16**

14. Assembly..... 16

VIII. ORDERING INFORMATION **17**

15. Ordering key..... 17

II. GENERAL

1. Description

1.1. The dampers consist of a aluminium frame, blades and a control actuator. Depending on used components, could be achieved requested properties. They are used to control the air flow by choking the flow.

Fig. 1 Damper RKALM

1.2. Damper dimensions

- dimensions — from 200 x 110 to 2000 x 2010 mm
- internal leakage acc. to EN 1751 — class 2, 3
- coefficient of thermal transmission per blade (blades with thermal divide) — up to 1,3 W/m^2.K

1.3. Working conditions

Maximum air circulation speed: 8 m.s^{-1}

Maximum pressure difference: 1200 Pa

Operation of the dampers does not depend on the direction of air circulation. The dampers can be located in an arbitrary position.

Dampers are suitable for ventilation systems, where air does not content any abrasive, chemical or adhesive particles.

Dampers are designed for macroclimatic areas with mild climate according to EN 60 721-3-3.

Temperature in the place of installation is permitted to range from - 20°C to + 50°C. If the electrical elements are mounted on the damper, temperature range is narrowed by the electrical elements.

2. Design

2.1. Damper design - internal leakage and coefficient of thermal transmission per blade

- Internal leakage class 2 - T2
- Internal leakage class 2, blades with thermal divide T2U1 (U = 1,3 W/m^2.K)
- Internal leakage class 2, blades with thermal divide T2U2 (U = 2,99 W/m^2.K)
- Internal leakage class 3 - T3
- Internal leakage class 3, blades with thermal divide - T3U1 (U = 1,3 W/m^2.K)
- Internal leakage class 3, blades with thermal divide - T3U2 (U = 2,99 W/m^2.K)

Fig. 2 Profiles of blades

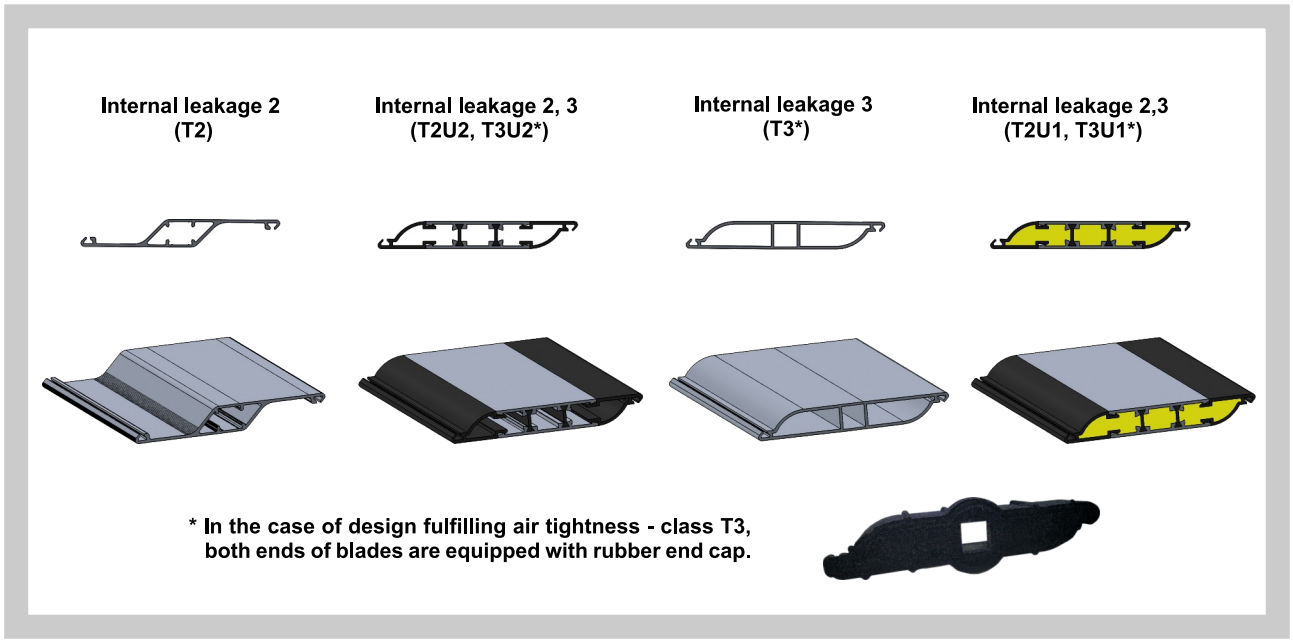

3. Dimensions and weights

3.1. Dimensions, airflow (effective) area, weights

Tab. 3.1.1. Dimensions, airflow (effective) area, weights

A x B	Number of blades	Sef [m²]	Weight [kg]		A x B	Number of blades	Sef [m²]	Weight [kg]	
			T3, T2U,T3U	T2				T3, T2U,T3U	T2
200 x 110	1	0,0191	2	2	**280 x 310**	3	0,0746	3,5	3,5
x 210	2	0,0362	2,5	2,5	**x 410**	4	0,0986	4,5	4,5
x 310	3	0,0533	3,5	3	**x 510**	5	0,1225	5,5	5
x 410	4	0,0704	4	4	**x 610**	6	0,1465	6	6
x 510	5	0,0875	5	4,5	**x 710**	7	0,1704	7	6,5
x 610	6	0,1046	5,5	5	**x 810**	8	0,1943	8	7,5
x 710	7	0,1217	6,5	6	**x 910**	9	0,2183	9	8,5
x 810	8	0,1388	7	6,5	**x 1010**	10	0,2422	10	9
x 910	9	0,1559	8	7,5	**x 1110**	11	0,2662	10,5	10
x 1010	10	0,1730	9	8,5	**x 1410**	14	0,3380	13	12
x 1110	11	0,1901	9,5	9	**x 1510**	15	0,3619	14,5	13
x 1410	14	0,2414	12	11	**x 1610**	16	0,3859	15	14
x 1510	15	0,2585	13	12	**x 1810**	18	0,4338	16,5	15,5
x 1610	16	0,2756	13,5	13	**x 2010**	20	0,4817	18,5	17
x 1810	18	0,3098	15	14	**300 x 110**	1	0,0287	2	2
x 2010	20	0,3440	16,5	15,5	**x 210**	2	0,0543	3	3
225 x 110	1	0,0215	2	2	**x 310**	3	0,0800	4	3,5
x 210	2	0,0407	2,5	2,5	**x 410**	4	0,1056	4,5	4,5
x 310	3	0,0600	3,5	3,5	**x 510**	5	0,1313	5,5	5
x 410	4	0,0792	4	4	**x 610**	6	0,1569	6,5	6
x 510	5	0,0984	5	4,5	**x 710**	7	0,1826	7	6,5
x 610	6	0,1177	5,5	5,5	**x 810**	8	0,2082	8	7,5
x 710	7	0,1369	6,5	6	**x 910**	9	0,2339	9,5	8,5
x 810	8	0,1562	7,5	7	**x 1010**	10	0,2595	10	9,5
x 910	9	0,1754	8,5	8	**x 1110**	11	0,2852	11	10
x 1010	10	0,1946	9	8,5	**x 1410**	14	0,3621	13,5	12,5
x 1110	11	0,2139	10	9,5	**x 1510**	15	0,3878	14,5	13,5
x 1410	14	0,2716	12	11,5	**x 1610**	16	0,4134	15,5	14
x 1510	15	0,2908	13,5	12,5	**x 1810**	18	0,4648	17	15,5
x 1610	16	0,3101	14	13	**x 2010**	20	0,5161	19	17
x 1810	18	0,3486	15,5	14,5	**315 x 110**	1	0,0301	2	2
x 2010	20	0,3870	17	16	**x 210**	2	0,0570	3	3
250 x 110	1	0,0239	2	2	**x 310**	3	0,0840	4	3,5
x 210	2	0,0453	3	2,5	**x 410**	4	0,1109	5	4,5
x 310	3	0,0666	3,5	3,5	**x 510**	5	0,1378	5,5	5
x 410	4	0,0880	4,5	4	**x 610**	6	0,1648	6,5	6
x 510	5	0,1094	5	5	**x 710**	7	0,1917	7,5	7
x 610	6	0,1308	6	5,5	**x 810**	8	0,2186	8	7,5
x 810	8	0,1735	7,5	7	**x 910**	9	0,2456	9,5	8,5
x 910	9	0,1949	8,5	8	**x 1010**	10	0,2725	10,5	9,5
x 1010	10	0,2163	9,5	9	**x 1110**	11	0,2994	11	10,5
x 1110	11	0,2377	10,5	9,5	**x 1410**	14	0,3802	13,5	12,5
x 1410	14	0,3018	12,5	11,5	**x 1510**	15	0,4072	15	13,5
x 1510	15	0,3232	13,5	13	**x 1610**	16	0,4341	15,5	14,5
x 1610	16	0,3445	14,5	13,5	**x 1810**	18	0,4880	17,5	16
x 1810	18	0,3873	16	15	**x 2010**	20	0,5419	19	17,5
x 2010	20	0,4301	17,5	16,5	**355 x 110**	1	0,0339	2,5	2,5
280 x 110	1	0,0267	2	2	**x 210**	2	0,0643	3	3
x 210	2	0,0507	3	3	**x 310**	3	0,0946	4	4

A x B	Number of blades	Sef [m²]	Weight [kg]		A x B	Number of blades	Sef [m²]	Weight [kg]	
			T3, T2U,T3U	T2				T3, T2U,T3U	T2
355 x 410	4	0,1250	5	4,5	**500 x 1010**	10	0,4326	12,5	11,5
x 510	5	0,1553	6	5,5	**x 1110**	11	0,4753	13,5	12
x 610	6	0,1857	7	6,5	**x 1410**	14	0,6036	16,5	15
x 710	7	0,2160	7,5	7	**x 1510**	15	0,6463	18	16
x 810	8	0,2464	8,5	8	**x 1610**	16	0,6891	19	17
x 910	9	0,2768	10	9	**x 1810**	18	0,7746	21	19
x 1010	10	0,3071	11	10	**x 2010**	20	0,8601	23,5	20,5
x 1110	11	0,3375	11,5	10,5	**550 x 110**	1	0,0525	3	3
x 1410	14	0,4285	14,5	13	**x 210**	2	0,0996	4	4
x 1510	15	0,4589	15,5	14	**x 310**	3	0,1466	5	4,5
x 1610	16	0,4892	16,5	15	**x 410**	4	0,1936	6	5,5
x 1810	18	0,5500	18	16,5	**x 510**	5	0,2407	7,5	6,5
x 2010	20	0,6107	20	18	**x 610**	6	0,2877	8,5	7,5
400 x 110	1	0,0382	2,5	2,5	**x 710**	7	0,3347	9,5	8,5
x 210	2	0,0724	3,5	3	**x 810**	8	0,3817	10,5	9,5
x 310	3	0,1066	4,5	4	**x 910**	9	0,4288	12	11
x 410	4	0,1408	5,5	5	**x 1010**	10	0,4758	13	12
x 510	5	0,1750	6	5,5	**x 1110**	11	0,5228	14,5	12,5
x 610	6	0,2092	7	6,5	**x 1410**	14	0,6639	17,5	15,5
x 710	7	0,2434	8	7,5	**x 1510**	15	0,7110	19	17
x 810	8	0,2776	9	8	**x 1610**	16	0,7580	20	18
x 910	9	0,3118	10,5	9,5	**x 1810**	18	0,8520	22	19,5
x 1010	10	0,3460	11,5	10,5	**x 2010**	20	0,9461	24,5	21,5
x 1110	11	0,3802	12,5	11	**560 x 110**	1	0,0535	3	3
x 1410	14	0,4829	15	13,5	**x 210**	2	0,1014	4	4
x 1510	15	0,5171	16,5	15	**x 310**	3	0,1493	5	5
x 1610	16	0,5513	17,5	15,5	**x 410**	4	0,1971	6,5	5,5
x 1810	18	0,6197	19	17,5	**x 510**	5	0,2450	7,5	6,5
x 2010	20	0,6881	21	19	**x 610**	6	0,2929	8,5	7,5
450 x 110	1	0,0430	2,5	2,5	**x 710**	7	0,3408	9,5	8,5
x 210	2	0,0815	3,5	3,5	**x 810**	8	0,3887	10,5	9,5
x 310	3	0,1199	4,5	4,5	**x 910**	9	0,4366	12	11
x 410	4	0,1584	5,5	5	**x 1010**	10	0,4845	13,5	12
x 510	5	0,1969	6,5	6	**x 1110**	11	0,5323	14,5	13
x 610	6	0,2354	7,5	7	**x 1410**	14	0,6760	17,5	15,5
x 710	7	0,2739	8,5	8	**x 1510**	15	0,7239	19	17
x 810	8	0,3123	9,5	8,5	**x 1610**	16	0,7718	20	18
x 910	9	0,3508	11	10	**x 1810**	18	0,8675	22,5	20
x 1010	10	0,3893	12	11	**x 2010**	20	0,9633	24,5	21,5
x 1110	11	0,4278	13	11,5	**600 x 110**	1	0,0573	3	3
x 1410	14	0,5432	16	14,5	**x 210**	2	0,1086	4,5	4
x 1510	15	0,5817	17	15,5	**x 310**	3	0,1599	5,5	5
x 1610	16	0,6202	18	16,5	**x 410**	4	0,2112	6,5	6
x 1810	18	0,6971	20	18	**x 510**	5	0,2625	7,5	7
x 2010	20	0,7741	22	20	**x 610**	6	0,3138	9	8
500 x 110	1	0,0478	3	2,5	**x 710**	7	0,3651	10	9
x 210	2	0,0905	4	3,5	**x 810**	8	0,4164	11	10
x 310	3	0,1333	5	4,5	**x 910**	9	0,4678	12,5	11,5
x 410	4	0,1760	6	5,5	**x 1010**	10	0,5191	14	12,5
x 510	5	0,2188	7	6,5	**x 1110**	11	0,5704	15	13
x 610	6	0,2615	8	7	**x 1410**	14	0,7243	18,5	16
x 710	7	0,3043	9	8	**x 1510**	15	0,7756	20	17,5
x 810	8	0,3470	10	9	**x 1610**	16	0,8269	21	18,5
x 910	9	0,3898	11,5	10,5	**x 1810**	18	0,9295	23,5	20,5

A x B	Number of blades	Sef [m²]	Weight [kg]		A x B	Number of blades	Sef [m²]	Weight [kg]	
			T3, T2U,T3U	T2				T3, T2U,T3U	T2
600 x 2010	20	1,0321	25,5	22,5	**710 x 610**	6	0,3714	9,5	8,5
630 x 110	1	0,0602	3	3	**x 710**	7	0,4321	11	9,5
x 210	2	0,1140	4,5	4	**x 810**	8	0,4928	12,5	11
x 310	3	0,1679	5,5	5	**x 910**	9	0,5535	14	12
x 410	4	0,2218	6,5	6	**x 1010**	10	0,6142	15	13,5
x 510	5	0,2757	8	7	**x 1110**	11	0,6749	16,5	14,5
x 610	6	0,3295	9	8	**x 1410**	14	0,8571	20	17,5
x 710	7	0,3834	10,5	9	**x 1510**	15	0,9178	21,5	19
x 810	8	0,4373	11,5	10	**x 1610**	16	0,9785	23	20
x 910	9	0,4911	13	11,5	**x 1810**	18	1,0999	25,5	22
x 1010	10	0,5450	14	12,5	**x 2010**	20	1,2213	28	24,5
x 1110	11	0,5989	15,5	13,5	**750 x 110**	1	0,0716	3,5	3,5
x 1410	14	0,7605	19	16,5	**x 210**	2	0,1358	5	4,5
x 1510	15	0,8144	20,5	18	**x 310**	3	0,1999	6	5,5
x 1610	16	0,8682	21,5	19	**x 410**	4	0,2640	7,5	6,5
x 1810	18	0,9760	24	21	**x 510**	5	0,3282	9	8
x 2010	20	1,0837	26	23	**x 610**	6	0,3923	10	9
650 x 110	1	0,0621	3,5	3	**x 710**	7	0,4564	11,5	10
x 210	2	0,1177	4,5	4	**x 810**	8	0,5206	12,5	11
x 310	3	0,1732	5,5	5	**x 910**	9	0,5847	14,5	12,5
x 410	4	0,2288	7	6	**x 1010**	10	0,6488	15,5	13,5
x 510	5	0,2844	8	7	**x 1110**	11	0,7130	17	15
x 610	6	0,3400	9	8	**x 1410**	14	0,9054	21	18
x 710	7	0,3956	17,5	15,5	**x 1510**	15	0,9695	22,5	19,5
x 810	8	0,4512	22	19,5	**x 1610**	16	1,0336	23,5	20,5
x 910	9	0,5067	24,5	21,5	**x 1810**	18	1,1619	26,5	23
x 1010	10	0,5623	3	3	**x 2010**	20	1,2902	29	25
x 1110	11	0,6179	4	4	**800 x 110**	1	0,0764	3,5	3,5
x 1410	14	0,7846	5	5	**x 210**	2	0,1448	5	4,5
x 1510	15	0,8402	5,5	5	**x 310**	3	0,2132	6,5	6
x 1610	16	0,8958	5	5	**x 410**	4	0,2816	8	7
x 1810	18	1,0070	6	5,5	**x 510**	5	0,3500	9	8
x 2010	20	1,1181	6,5	6	**x 610**	6	0,4184	10,5	9
700 x 110	1	0,0669	6,5	5,5	**x 710**	7	0,4869	12	10,5
x 210	2	0,1267	7,5	6,5	**x 810**	8	0,5553	13	11,5
x 310	3	0,1866	8,5	7,5	**x 910**	9	0,6237	15	13
x 410	4	0,2464	9,5	8,5	**x 1010**	10	0,6921	16,5	14
x 510	5	0,3063	10,5	9,5	**x 1110**	11	0,7605	17,5	15,5
x 610	6	0,3661	13,5	12	**x 1410**	14	0,9657	21,5	19
x 710	7	0,4260	17,5	15,5	**x 1510**	15	1,0341	23,5	20
x 810	8	0,4859	22,5	20	**x 1610**	16	1,1025	24,5	21,5
x 910	9	0,5457	24,5	21,5	**x 1810**	18	1,2393	27,5	23,5
x 1010	10	0,6056	3	3	**x 2010**	20	1,3762	30	26
x 1110	11	0,6654	4,5	4	**900 x 110**	1	0,0860	4	4
x 1410	14	0,8450	5,5	5	**x 210**	2	0,1629	5,5	5
x 1510	15	0,9049	5,5	5,5	**x 310**	3	0,2399	7	6,5
x 1610	16	0,9647	5,5	5	**x 410**	4	0,3168	8,5	7,5
x 1810	18	1,0844	6	5,5	**x 510**	5	0,3938	10	8,5
x 2010	20	1,2041	6,5	6	**x 610**	6	0,4708	11,5	10
710 x 110	1	0,0678	6,5	6	**x 710**	7	0,5477	13	11
x 210	2	0,1285	7,5	7	**x 810**	8	0,6247	14	12,5
x 310	3	0,1892	9	8	**x 910**	9	0,7016	16	14
x 410	4	0,2499	10	9	**x 1010**	10	0,7786	17,5	15
x 510	5	0,3107	11	10	**x 1110**	11	0,8555	19	16,5

A x B	Number of blades	Sef [m²]	Weight [kg]		A x B	Number of blades	Sef [m²]	Weight [kg]	
			T3, T2U,T3U	T2				T3, T2U,T3U	T2
900 x 1410	14	1,0864	23,5	20	**1400 x 510**	5	0,6126	13,5	11,5
x 1510	15	1,1634	25	21,5	**x 610**	6	0,7323	15,5	13
x 1610	16	1,2403	26,5	23	**x 710**	7	0,8520	17,5	15
x 1810	18	1,3943	29,5	25	**x 810**	8	0,9717	19,5	16,5
x 2010	20	1,5482	32,5	27,5	**x 910**	9	1,0914	21,5	18,5
1000 x 110	1	0,0955	4,5	4	**x 1010**	10	1,2111	23,5	20
x 210	2	0,1810	6	5,5	**x 1110**	11	1,3309	25,5	21,5
x 310	3	0,2665	7,5	6,5	**x 1410**	14	1,6900	31,5	26,5
x 410	4	0,3520	9	8	**x 1510**	15	1,8097	34	28,5
x 510	5	0,4376	10,5	9,5	**x 1610**	16	1,9294	35,5	30
x 610	6	0,5231	12	10,5	**x 1810**	18	2,1689	39,5	33
x 710	7	0,6086	13,5	12	**x 2010**	20	2,4083	43,5	36,5
x 810	8	0,6941	15	13	**1500 x 610**	12	0,7846	18,5	16,5
x 910	9	0,7796	17	15	**x 710**	14	0,9129	21	18,5
x 1010	10	0,8651	18,5	16	**x 810**	16	1,0411	23,5	20,5
x 1110	11	0,9506	20,5	17,5	**x 910**	18	1,1694	26,5	23
x 1410	14	1,2071	25	21,5	**x 1010**	20	1,2977	29	25
x 1510	15	1,2927	27	23	**x 1110**	22	1,4259	31,5	27
x 1610	16	1,3782	28,5	24	**x 1410**	28	1,8107	38,5	33,5
x 1810	18	1,5492	31,5	27	**x 1510**	30	1,9390	41,5	36
x 2010	20	1,7202	34,5	29,5	**x 1610**	32	2,0672	44	38
1100 x 110	1	0,1051	4,5	4,5	**x 1810**	36	2,3238	49	42
x 210	2	0,1991	6,5	6	**x 2010**	40	2,5803	53,5	46
x 310	3	0,2932	8	7	**1600 x 610**	12	0,8369	19,5	17
x 410	4	0,3872	9,5	8,5	**x 710**	14	0,9737	22	19
x 510	5	0,4813	11,5	10	**x 810**	16	1,1105	24,5	21,5
x 610	6	0,5754	13	11	**x 910**	18	1,2473	27,5	24
x 710	7	0,6694	14,5	12,5	**x 1010**	20	1,3842	30	26
x 810	8	0,7635	16,5	14	**x 1110**	22	1,5210	32,5	28,5
x 910	9	0,8575	18,5	15,5	**x 1410**	28	1,9314	40,5	34,5
x 1010	10	0,9516	20	17	**x 1510**	30	2,0682	43,5	37
x 1110	11	1,0457	21,5	18,5	**x 1610**	32	2,2051	46	39,5
x 1410	14	1,3279	26,5	22,5	**x 1810**	36	2,4787	51	43,5
x 1510	15	1,4219	28,5	24	**x 2010**	40	2,7523	56	48
x 1610	16	1,5160	30	25,5	**1800 x 610**	12	0,9415	21	18,5
x 1810	18	1,7041	33,5	28,5	**x 710**	14	1,0954	24	20,5
x 2010	20	1,8922	37	31	**x 810**	16	1,2493	26,5	23
1250 x 110	1	0,1194	5	5	**x 910**	18	1,4033	30	26
x 210	2	0,2263	7	6,5	**x 1010**	20	1,5572	32,5	28
x 310	3	0,3332	9	8	**x 1110**	22	1,7111	35,5	30,5
x 410	4	0,4401	10,5	9,5	**x 1410**	28	2,1729	43,5	37
x 510	5	0,5469	12,5	11	**x 1510**	30	2,3268	47	40
x 610	6	0,6538	14	12	**x 1610**	32	2,4807	49,5	42
x 710	7	0,7607	16	13,5	**x 1810**	36	2,7885	55	47
x 810	8	0,8676	18	15	**x 2010**	40	3,0964	60,5	51,5
x 910	9	0,9745	20	17	**2000 x 610**	12	1,0461	23	19,5
x 1010	10	1,0814	22	18,5	**x 710**	14	1,2171	25,5	22
x 1110	11	1,1883	23,5	20	**x 810**	16	1,3882	28,5	24,5
x 1410	14	1,5089	29	24,5	**x 910**	18	1,5592	32	27,5
x 1510	15	1,6158	31	26,5	**x 1010**	20	1,7302	35	30
x 1610	16	1,7227	33	28	**x 1110**	22	1,9012	38	32,5
x 1810	18	1,9365	36,5	30,5	**x 1410**	28	2,4143	47	39,5
x 2010	20	2,1503	40	33,5	**x 1510**	30	2,5853	50,5	42,5
1400 x 110	1	0,1337	5,5	5,5	**x 1610**	32	2,7563	53,5	45
x 210	2	0,2534	7,5	7	**x 1810**	36	3,0984	59	50
x 310	3	0,3731	9,5	8,5	**x 2010**	40	3,4404	65	55
x 410	4	0,4929	11,5	10					

Atypical dimensions are supplied only for the dampers with the blades in design T2.
S_{ef} - effective area for fully opened damper.
The weights listed in the table are valid for the basic version (manually controlled). The weight of the servo actuator must be added to all other versions – see table 5.1.1. and 5.1.2.

Fig. 3 Damper dimensions

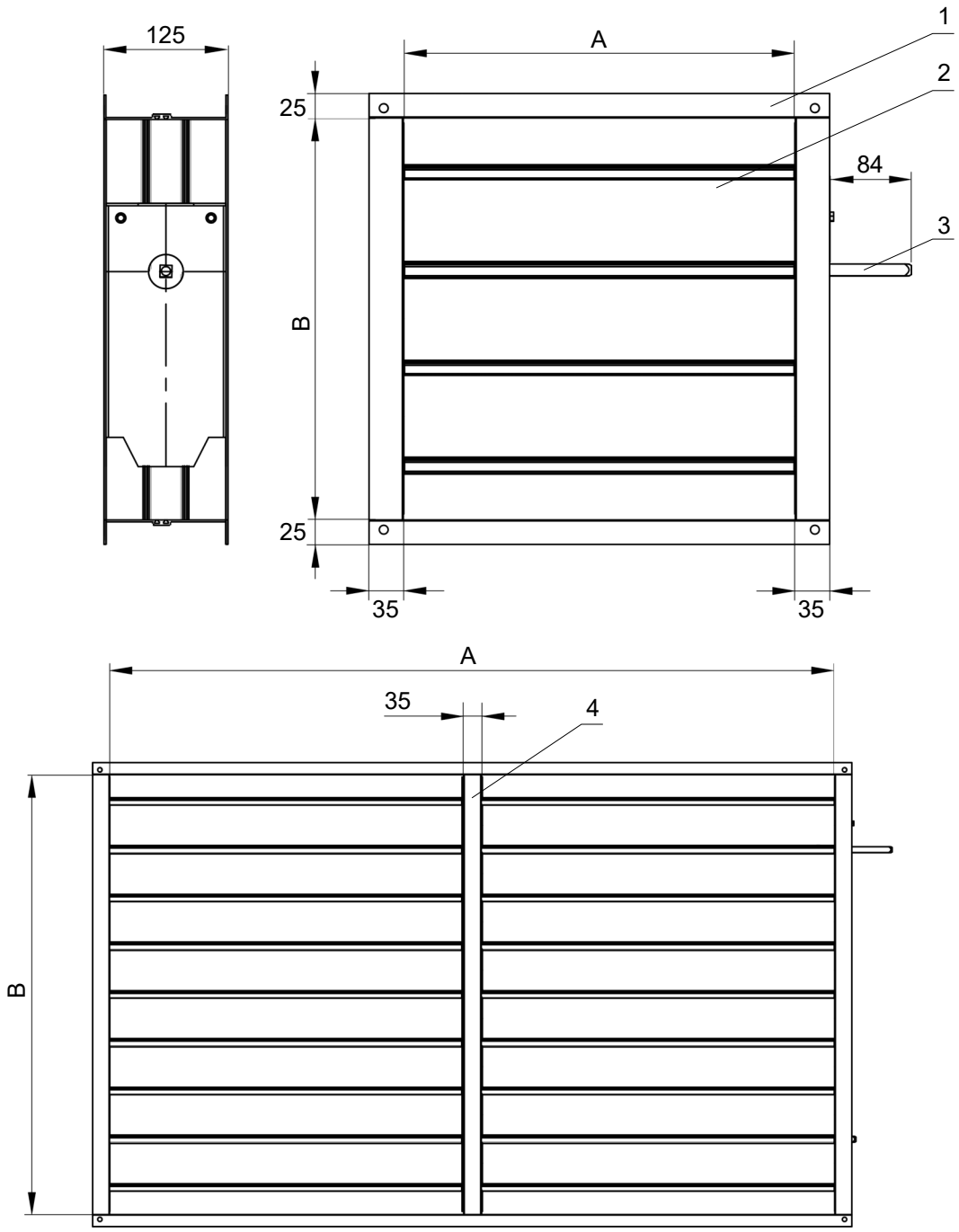

Position:

1. Damper body
2. Damper blade
3. Control rod
4. Divider (only for dampers where A > 1400)

Fig. 4 Damper dimensions

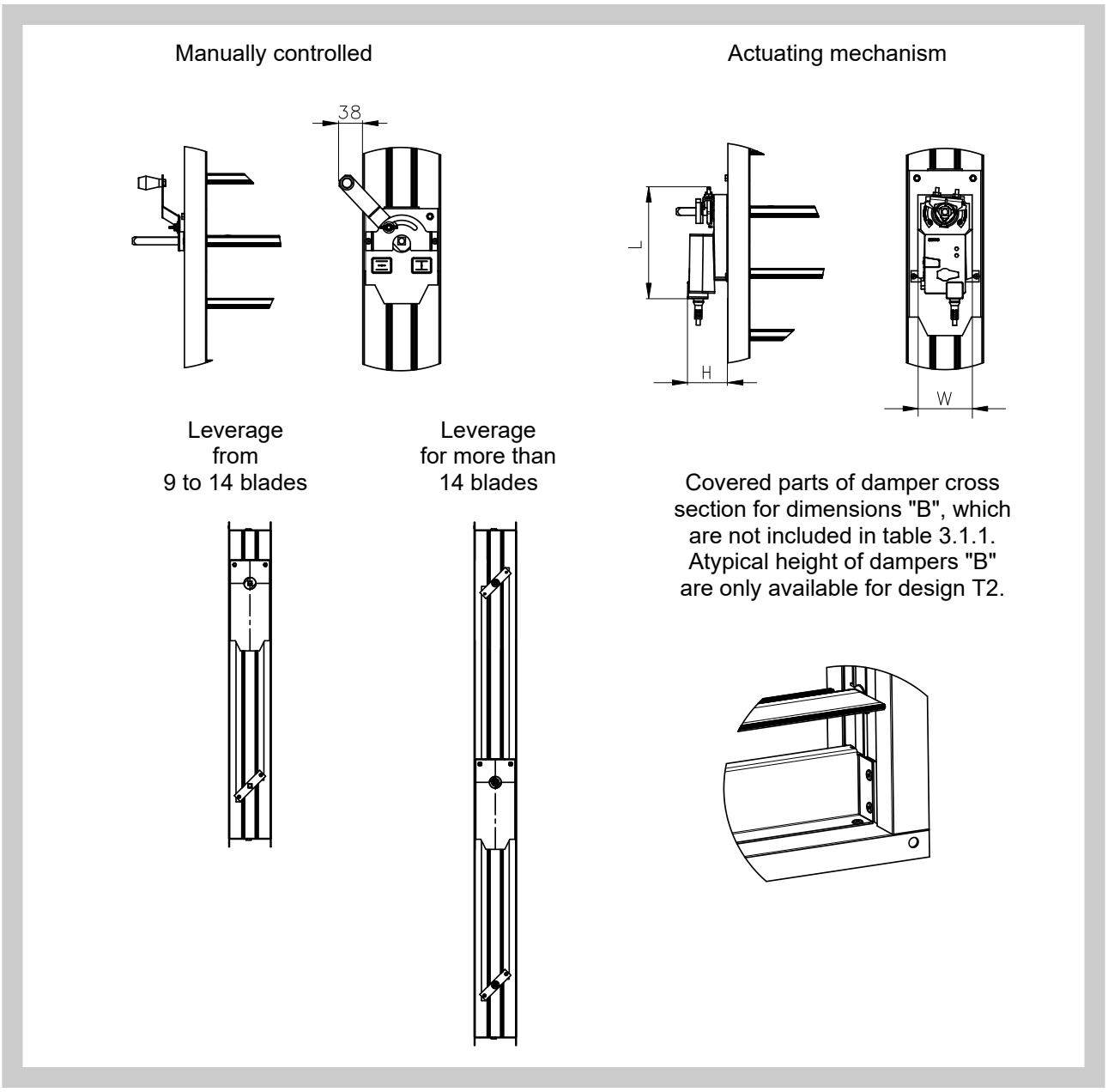

Fig. 5 Flange of regulation damper

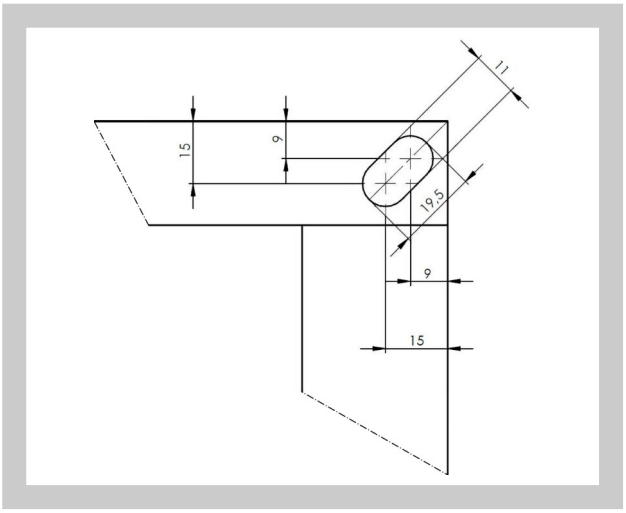

3.2. Dampers are provided square−shaped pin of cross−section 12x12 mm,

4. Placement and installation

4.1. The dampers are designed to be installed into the air duct. The blades can be used in any orientation.

4.2. The actuator requires a 250 mm clearance (minimum).

III. TECHNICAL DATA

5. Electrical elements, wiring diagram

5.1. Types and weights of servo actuators for control of dampers

Tab. 5.1.1. Type of actuating mechanism for individually dampers T2 a T2U

Dampers	Type of servo actuator	Position signal	Torque	Weight of actuator [kg]	Dimensions L x H x W
Up to 1 m²	Belimo LM 230A-S (.46)	YES	5 Nm	0,6	116 x 64 x 88
	Belimo LM 230A (.45)	NO		0,5	
	Belimo LM 24A-S (.56)	YES		0,6	
	Belimo LM 24A (.55)	NO		0,5	
	Belimo LM 24A-SR (.57)	YES		0,5	
Up to 2 m²	Belimo NM 230A-S (.46)	YES	10 Nm	0,85	124 x 62 x 80
	Belimo NM 230A (.45)	NO		0,8	
	Belimo NM 24A-S (.56)	YES		0,85	
	Belimo NM 24A (.55)	NO		0,75	
	Belimo NM 24A-SR (.57)	YES		0,8	
Up to 4 m²	Belimo SM 230A-S (.46)	YES	20 Nm	1,1	139 x 64 x 88
	Belimo SM 230A (.45)	NO		1,05	
	Belimo SM 24A-S (.56)	YES		1,05	
	Belimo SM 24A (.55)	NO		1	
	Belimo SM 24A-SR (.57)	YES		1,05	

Tab. 5.1.2. Type of actuating mechanism for individually dampers T3 a T3U

Dampers	Type of servo actuator	Position signal	Torque	Weight of actuator [kg]	Dimensions L x H x W
Up to 1 m²	Belimo NM 230A-S (.46)	YES	10 Nm	0,85	124 x 62 x 80
	Belimo NM 230A (.45)	NO		0,8	
	Belimo NM 24A-S (.56)	YES		0,85	
	Belimo NM 24A (.55)	NO		0,75	
	Belimo NM 24A-SR (.57)	YES		0,8	
Up to 2 m²	Belimo SM 230A-S (.46)	YES	20 Nm	1,1	139 x 64 x 88
	Belimo SM 230A (.45)	NO		1,05	
	Belimo SM 24A-S (.56)	YES		1,05	
	Belimo SM 24A (.55)	NO		1	
	Belimo SM 24A-SR (.57)	YES		1,05	
Up to 4 m²	Belimo GM 230.13 (.45)	NO	40 Nm	1,6	179 x 72 x 116
	Belimo GM 24.13 (.55)	NO		1,6	
	Belimo GM 24SR.12 (.57)	YES		1,6	

5.2. Supply voltage and power input.

Tab. 5.2.1. Supply voltage and power input

Type of actuator	Supply voltage	Power input		
		In operation	Resting position	Dimensioning
LM 230A, LM 230A-S	AC 100 ... 240 V, 50/60 Hz	1,5 W	0,4 W	4 VA
LM 24A, LM 24A-S	AC 24 V, 50/60 Hz; DC 24 V	1,0 W	0,2 W	2 VA
LM 24A-SR	AC 24 V, 50/60 Hz; DC 24 V	1,0 W	0,4 W	2 VA
NM 230A, NM 230A-S	AC 100 ... 240 V, 50/60 Hz	2,5 W	0,6 W	6 VA
NM 24A, NM 24A-S	AC 24 V, 50/60 Hz; DC 24 V	1,5 W	0,2 W	3,5 VA
NM 24A-SR	AC 24 V, 50/60 Hz; DC 24 V	2,0 W	0,4 W	4 VA
SM 230A, SM 230A-S	AC 100 ... 240 V, 50/60 Hz	2,5 W	0,6 W	6 VA
SM 24A, SM 24A-S	AC 24 V, 50/60 Hz; DC 24 V	2,0 W	0,2 W	4 VA
SM 24A-SR	AC 24 V, 50/60 Hz; DC 24 V	2,0 W	0,4 W	4 VA
GM 230.13	AC 100 ... 240 V, 50/60 Hz	3 W	0,6 W	5,5 VA
GM 24.13	AC 24 V, 50/60 Hz; DC 24 V	2 W	0,2 W	5 VA
GM 24SR.12	AC 24 V, 50/60 Hz; DC 24 V	2 W	0,2 W	5 VA

5.3. Wiring diagram of servo actuators Belimo

Fig. 6 Wiring diagram of servo actuators Belimo LM 230A, NM 230A, SM 230A a GM 230.13

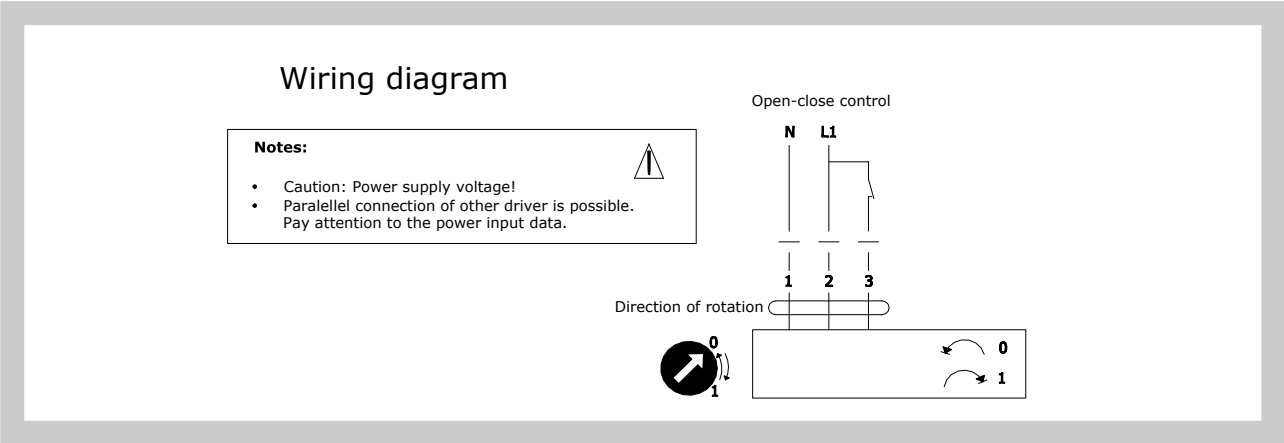

Fig. 7 Wiring diagram of servo actuators Belimo LM 230A-S, NM 230A-S, SM 230A-S

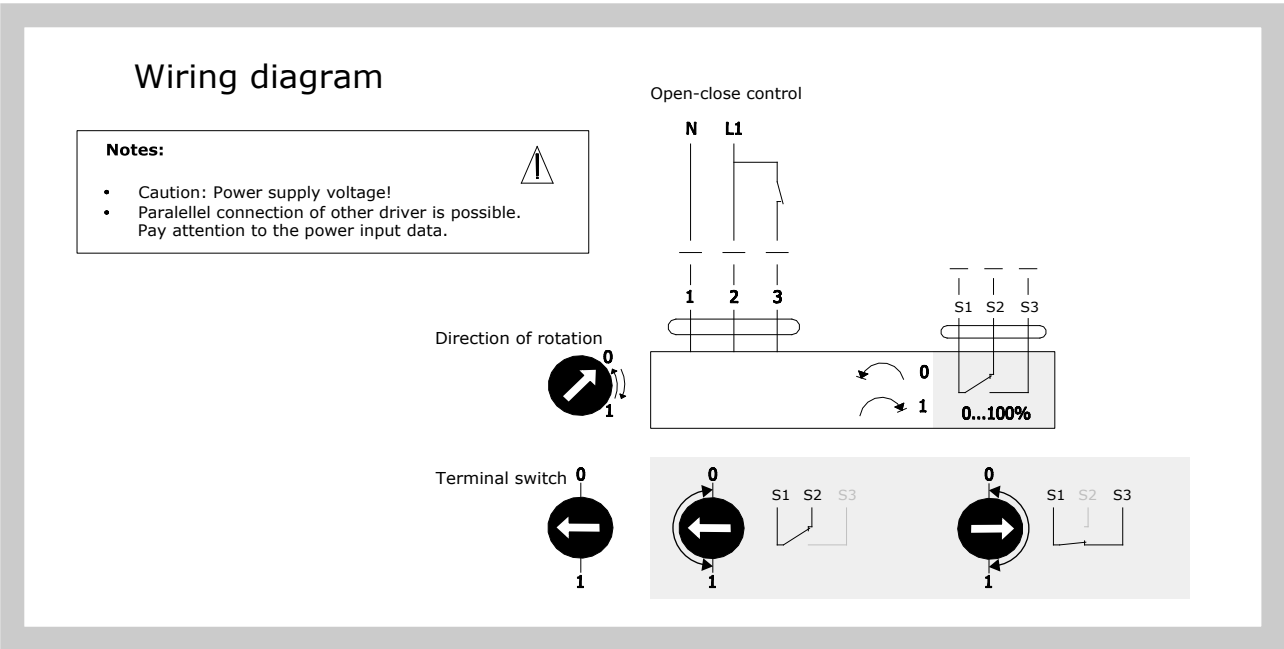

Fig. 8 Wiring diagram of servo actuators Belimo LM 24A, NM 24A, SM 24A a GM 24.13

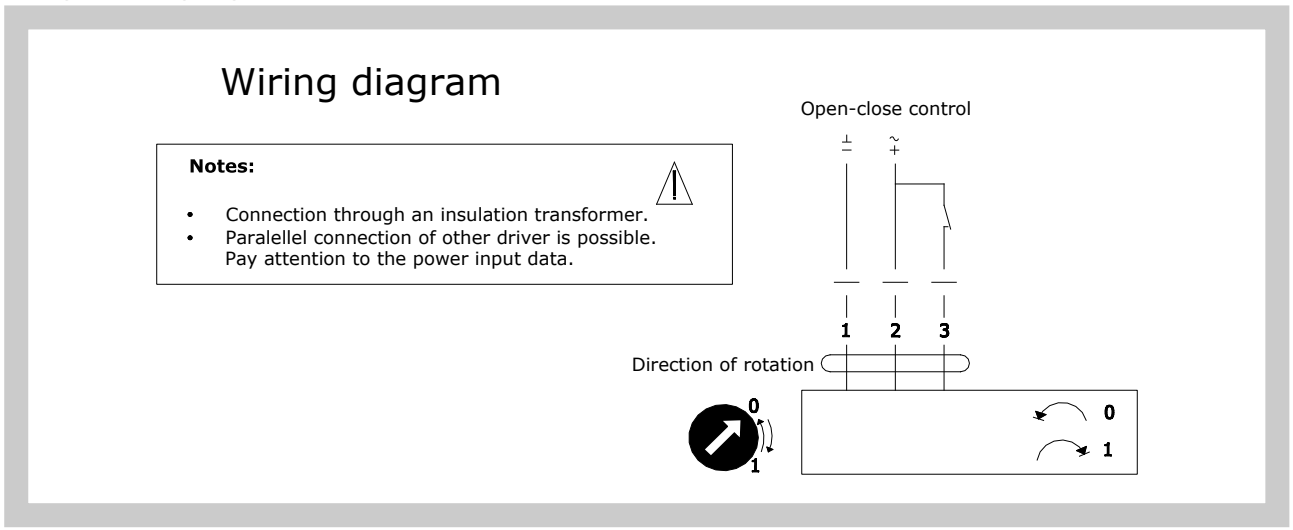

Fig. 9 Wiring diagram of servo actuators Belimo LM 24A-S, NM 24A-S, SM 24A-S

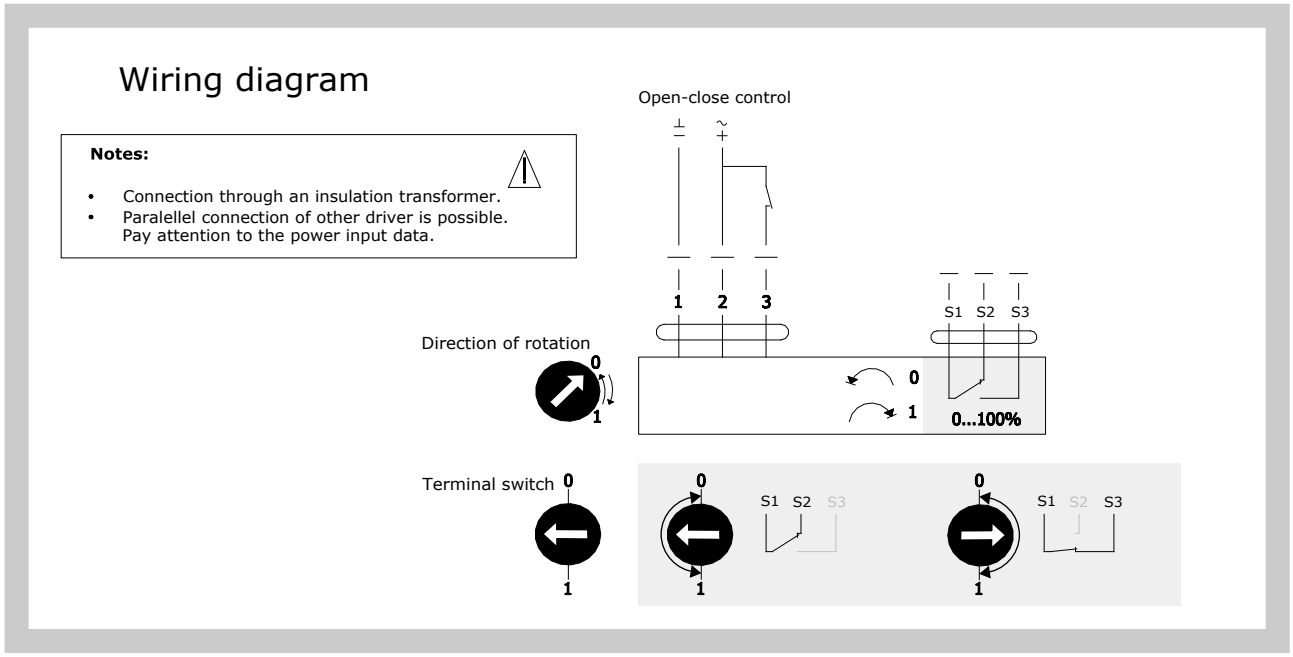

Fig. 10 Wiring diagram of servo actuators Belimo LM 24A-SR, NM 24A-SR, SM 24A-SR a GM 24SR.12

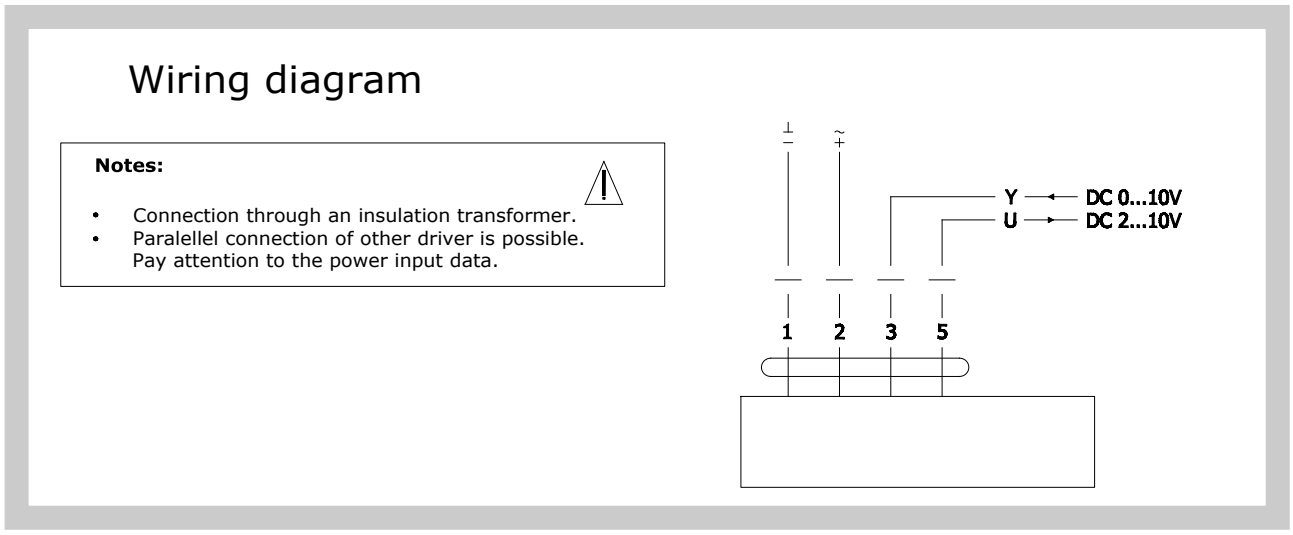

6. Pressure loss

6.1. Pressure loss depending on the angle of damper blade

Δp	[Pa]	pressure loss
w	[m/s]	air flow speed in nominal damper section
ρ	[kg/m³]	air density

Determination of pressure loss by using diagram ρ = 1,2 kg/m³

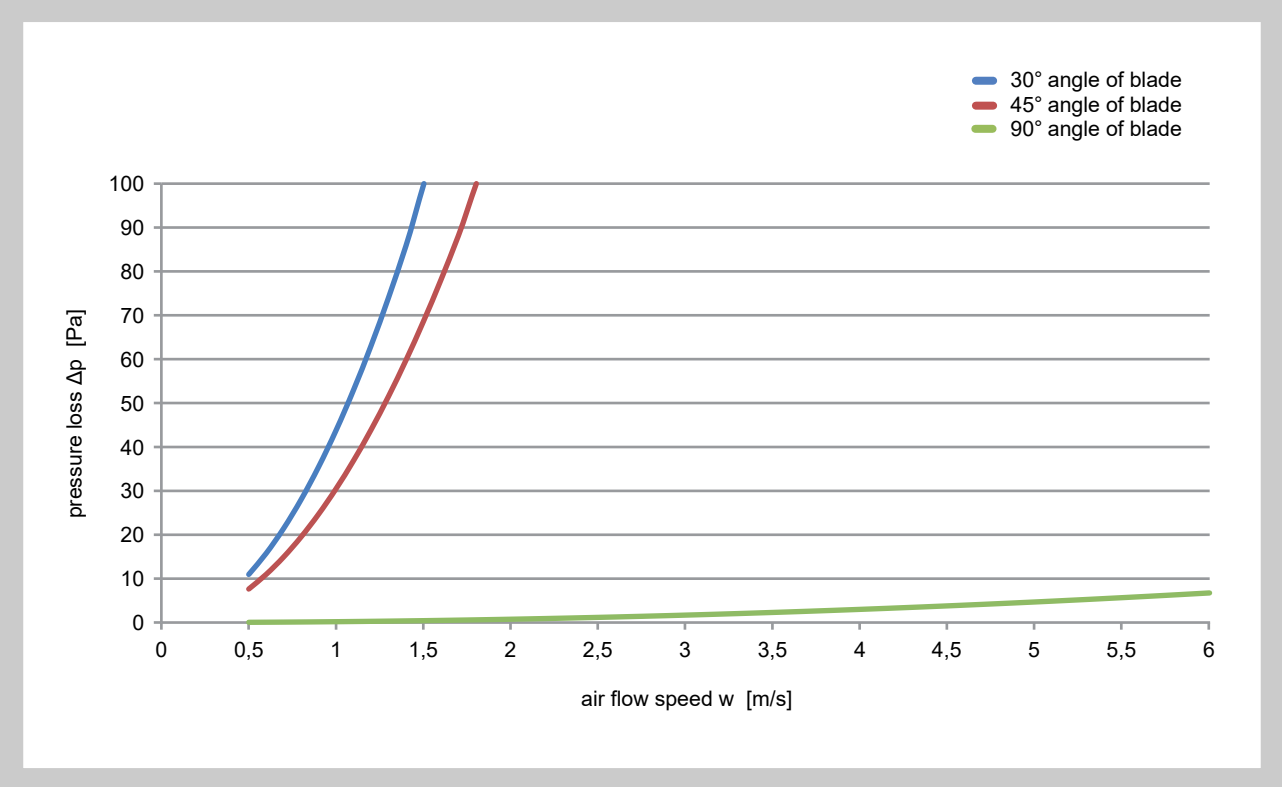

IV. MATERIAL, FINISHING

7. Material

7.1. The frame and blades are made of aluminium EN AW 6060 T6, the pins are made of plastic, the pins for actuating are made of galvanized steel. Gears are made of polypropylene.

Gasket for dampers with internal leakage class 2 is made of TPE-V + PP.
Gasket for dampers with internal leakage class 3 is made of TPE-V.

7.2. The damper has no other surface treatment.

V. INSTALLATION, OPERATION, INSPECTION AND TESTING

8. Incorrect use

8.1. RKALM damper is not intended to be used in:
- outdoors, without appropriate protection against effects of weather conditions
- in rooms with high humidity, freezy conditions or with impact of aggressive or dusty air
- in area with risk of explosive atmospheare

9. Installation

9.1. Installation of RKALM must be provided by professional mechanician on the wall or on the air ductwork.
Electrical connections (wiring) have to be installed according to wirring digram, by proffesional electrician.
When the installation is ready, then anyone **must be prevented against inserting of hands or fingers in between opened blades**, by for example pretection grills on both sites.
Condensing watter or freeze in between blades must be pre-empted, while it may damage the functionality of the damper.
The RKALM with electric actuator can be operated also manually when needed, by pushing the black button and turning the orange ring or using the inner screwdriver inserted into the white plastic wheel. This will allow to turn manually the actuator and consequently the blades (Fig. 11).

Fig. 11

10. Maintenance

10.1. RKALM damper is maintenance free.
Actuating mechanism and the operational systems should be only checked in open and close possitions once per year.
The aim of this regular check is to ensure, that there is no grime or other extraneous elements blocking repositioning of blades (in both ON/OFF extreme positions).
The damper should be subject of regular cleaning process.

11. Inspection

11.1. Dimensions are checked using regular rulers according to the standard applicable to dimensions without defined tolerances used in air-handling and ventilation sectors.

11.2. Intraoperational inspections of the parts and main dimensions according to the drawing documentation are performed.

12. Testing

12.1. After assembly, the operation of the blade and of electrical actuators is performed.

VI. PACKING, TRANSPORT, STORAGE

13. Logistical data

13.1. The delivery includes a complete damper including the control mechanism.

13.2. The damper are transported as bulk cargo, using suitable covered means of transport. When agreed upon with the manufacturer, the dampers can be loaded onto palettes or wooden crates. Dampers must be protected from mechanical damage during transport and storage.
If packing is used, it is non−returnable and its price is not included in the price of the damper.

13.3. If not otherwise agreed, the handover is considered when the goods is forwarded to the carrier.

13.4. The dampers must be stored in the indoor environment without any aggressive vapours, gases or dust. Indoor temperature must be in the range from -5 °C to +40 °C and maximum relative humidity 80%. Dampers must be protected against mechanic damages when transported and manipulated.

VII. ASSEMBLY

14. Assembly

14.1. The assembly consists of installation of the damper into the air duct, with connection of optional servo actuator to the mains.

VIII. ORDERING INFROMATION

12. Ordering key

1	2	3	4		5	6	7
RKALM	200x310	.09	Q35/25	-	AL	T3	U1

EXAMPLE:
RKALM 200x310 .09 Q35/25-AL T3 U1
Regulation damper RKALM, dimension 200x310 mm, to fit actuator drive - ready to mount an actuator, flange width 35/25 mm, aluminium design, tightness 3, thermal transmittance U1.

1| Regulation damper type – RKALM

2| Regulation damper dimensions A x B → see pages 5 to 8
„A“ is the width of the damper
„B“ is the height of the damper

3| Damper design

.01	Manual control
.09	To fit actuator drive - ready to mount an actuator
.43	Actuator with emergency function 230V - closed without voltage
.45	Actuator controlled 230V, two point regulation - without position signal
.46	Actuator controlled 230V, two point regulation - with position signal
.48	Actuator with emergency function 230V - two point regulation + position signal (2 positions) - closed without voltage
.53	Actuator with emergency function 24V - closed without voltage
.55	Actuator controlled 24V, two point regulation - without position signal
.56	Actuator controlled 24V, two point regulation - with position signal
.57	Actuator controlled 24V SR with smooth regulation
.58	Actuator with emergency function 24V - with position signal (2 positions)

For some design, the size range of the product is limited due to the lack of a drive with a larger torque.

4| Flange dimension

Q35/25	Flange width 35/25 mm

5|Material

AL	Aluminium

6| Damper tightness

T2	Tightness 2
T3	Tightness 3

7|Thermal transmittance

U1	Coefficient U1
U2	Coefficient U2

The producer reserves the right for innovations of the product.
For actual product information see www.mandik.com

MANDÍK®

www.mandik.com

MANDÍK, a.s. • Dobříšská 550 • 267 24 Hostomice • Czech Republic • Tel.: +420 311 706 742 • E-Mail: mandik@mandik.cz